Foreword

Thank you for choosing Powtran PI500-S Series Frequency Inverter. This product made by Powtran is based on years of experience in professional production and sale, and designed for variety of industrial machinery, fan and water pump drive unit and IF heavy-duty grinding unit.

This manual provides user the relevant precautions on installation, operational parameter setting, abnormal diagnosis, routine maintenance and safe use. In order to ensure correct installation and operation of the frequency converter, please carefully read this manual before installing it.

For any problem when using this product, please contact your local dealer authorized by this company or directly contact this company, our professionals are happy to serve you.

The end-users should hold this manual, and keep it well for future maintenance & care, and other application occasions. For any problem within the warranty period, please fill out the warranty card and fax it to the our authorized dealer.

The contents of this manual are subject to change without prior notice. To obtain the latest information, please visit our website.

For more product information, please visit: **http:// www.powtran.com**.

Powtran

August, 2017

Contents

Chapter 1.Inspection and safety precautions 1
1-1. Inspection after unpacking 1
1-1-1. Instructions on nameplate 1
1-1-2. Model designation 1
1-2. Safety precautions 2
1-3. Precautions 3
1-4. Scope of applications 5

Chapter 2 Standard specifications 6
2-1. Technical specifications 6
2-2. Standard specifications 7

Chapter 3 Keyboard 10
3-1. Keyboard Description 10
3-2. Keyboard Indicators 10
3-3. Description of operation panel keys 11
3-4. Keyboard display letters and numbers correspondence table ... 11
3-5. Examples of parameter settings 12
3-5-1. Instructions on viewing and modifying function code 12
3-5-2. The way to read parameters in various status 13
3-5-3. Password settings 13
3-5-4. Motor parameter auto turning 13

Chapter 4 Installation and commissioning 14
4-1. Use of the environment 14
4-2. Installation direction and space 14
4-3. Wiring Diagram 15
4-3-1. Function description of main circuit terminal 15
4-3-2. Control circuit terminals arrangement 16
4-3-3. Wiring diagram 18
4-4. Wiring Precautions 21
4-5. Commissioning 23

Chapter 5 Function parameter 24
5-1. Menu grouping 24
5-1-1. d0Group - Monitoring function group 25
5-1-2. F0 Group -Basic function group 26

5-1-3. F1 Group - Input terminals group 28
5-1-4. F2 Output terminal group 30
5-1-5. F3 Group Start and stop control group 34
5-1-6. F4 V/F control group 34
5-1-7. F6 Keyboard and Display 35
5-1-8. F7 Group Auxiliary function 36
5-1-9. F8 Group-Fault and protection 37
5-1-10. Communication parameterF9.00 38
5-1-11. FB Control optimization parameters 40
5-1-12. E0 Solar water pump special group PI9000-S 40
5-1-13. E2 PID function parameter. 42
5-1-14. .E3 virtual terminal group 44
5-1-15. b0 motor parameter group 46
5-1-16. y0 Function code management 47
5-1-17. y1 Fault query: 48

Chapter 6 Troubleshooting 50
6-1. Fault alarm and countermeasures 50
6-2. EMC (Electromagnetic Compatibility) 54
6-2-1 EMC standard 54
6-3. EMC directive 54
6-3-1. Harmonic effect 54
6-3-2. Electromagnetic interference and installation precautions 54
6-3-3. Remedies for the interference from the surrounding electromagnetic equipment to the inverter 54
6-3-4. Remedies for the interference from the inverter to the surrounding electromagnetic equipment 55
6-3-5. Remedies for leakage current 55
6-3-6. Precautions on installing EMC input filter at the input end of power supply 55

Chapter 7 Dimension 57
7-1. Dimension 57
7-1-1. Product outside drawing, installation size 57
7-1-2. PI500-S series 57
7-1-3. PI500 Series(With DC reactor base) 57
7-1-4. Keypad dimension drawing 60

Chapter 8 Maintenance and repair 62
8-1. Inspection and maintenance 62
8-2. Parts for regular replacement 62
8-3. Storage 63
8-4. Capacitor 63
8-4-1. Capacitor rebuilt 63
8-5. Measuring and readings 64
Chapter 9 Warranty 65
Appendix I Recommended solar array configuration 66
Appendix II RS485 Communication protocol 67

Chapter 1.Inspection and safety precautions

POWTRAN frequency inverters have been tested and inspected before leaving factory. After purchasing, please check if its package is damaged due to careless transportation, and if the specifications and model of the product are consistent with your order requirements. For any problem, please contact your local authorized POWTRAN dealer or directly contact this company.

1-1. Inspection after unpacking

※ Check if that packing container contains this unit, one manual and one warranty card.

※ Check the nameplate on the side of the frequency inverter to ensure that the product you have received is right the one you ordered.

1-1-1. Instructions on nameplate

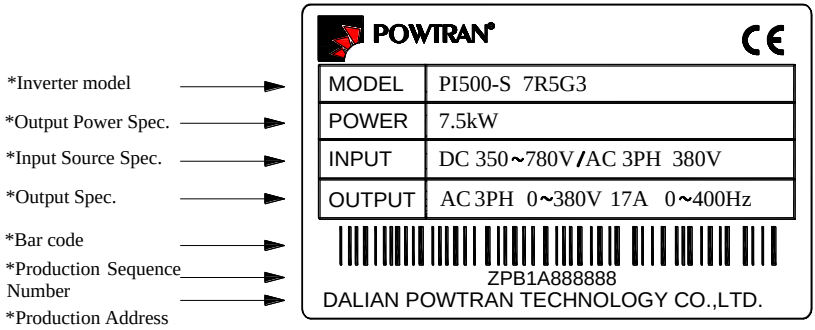

Diagram 1-1:Nameplate Description

1-1-2. Model designation

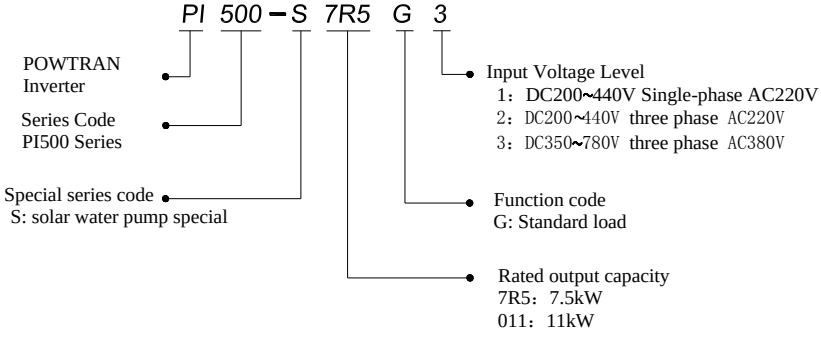

1-2. Safety precautions

Safety precautions in this manual are divided into the following two categories:

Danger: the dangers caused by failure to perform required operation, may result in serious injury or even death;

Caution:the dangers caused by failure to perform required operation, may result in moderate injury or minor injury, and equipment damage;

Process	Type	Explanation
Before installation	Danger	●When unpacking, if control system with water, parts missed or component damaged are found, do not install! ●If packing list does not match the real name, do not install! ● Gently carry with care, otherwise there is the risk of damage to equipment! ●Please do not use the damaged driver or the frequency inverter with missed pieces, otherwise there is the risk of injury! ●Do not use your hand to touch the control system components, otherwise there is the risk of electrostatic damage!
When installing	Danger	● Please install the unit on the metal or flame retardant objects; away from combustible material. Failure to do so may cause a fire! ● Never twist the mounting bolts of the equipment components, especially the bolt with the red mark!
	Note	● Do not let the lead wires or screws fall into the driver. Otherwise which may cause damage to the driver! ● Keep the driver installed in the place where less vibration, avoid direct sunlight. ● When two or more converters are installed in a cabinet, please pay attention to the installation location, ensure the good heat dissipation effect.
When wiring	Danger	● Must comply with this manual's guidance, any construction shall be performed by a professional electrician, otherwise there would be the unexpected risk ! ● A circuit breaker must be set between the inverter and the power supply to separate them, otherwise it may cause a fire! ● Verify if power is a zero-energy status before wiring, otherwise there is a risk of electric shock! ● The inverter shall be grounded correctly according to standard specifications, otherwise there is a danger of electrical shock! ● Ensure that the distribution line meets the regional safety standards of EMC requirements. The diameter of used wire shall refer to the recommendations of this manual. Otherwise it may cause an accident! ● Never directly connect braking resistor to the DC bus P(+) and P(-) terminals. Otherwise it may cause a fire! ● Encoder must use the shielded wire, and the shielding layer must ensure the single-ended grounded!
Before energizing	Note	● Please confirm whether the input power voltage is same as the inverter rated voltage; wiring positions of power input terminals(R, S, T) and output terminals(U, V, W) are correct or not; and note that if there is a short circuit in the peripheral circuit connected to driver, if the connected lines are tight, otherwise it may cause damage to the driver! ● Do not need to perform withstand voltage test for any part of the

		inverter, this product has been tested before leaving factory. Otherwise it may cause an accident!
	Danger	● The inverter's cover plate must be closed before power on. Otherwise it may cause an electric shock! ● Wiring of all external accessories must comply with the guidance of this manual, please correctly wiring in accordance with the circuit connection methods described in this manual. Otherwise it may cause an accident!
After energizing	Danger	● Do not open cover plate after energizing. Otherwise there is a risk of electric shock! ● Do not touch the driver and peripheral circuits with wet hands. Otherwise there is a risk of electric shock! ● Do not touch any input and output terminals of the inverter. Otherwise there is a risk of electric shock! ● The inverter automatically perform the safety testing for the external strong electrical circuit in the early stages of energizing, therefore never touch the driver terminals(U, V, W) or motor terminals, otherwise there is a risk of electric shock! ● If you need to identify the parameters, please pay attention to the danger of injury during motor rotation. Otherwise it may cause an accident! ● Please do not change the inverter manufacturer parameters. Otherwise it may cause damage to this unit!
During operation	Danger	● Do not touch the cooling fan and the discharge resistor to feel the temperature. Otherwise it may cause burns! ● Non-professional personnel is not allowed to detect signal when operating. Doing so may cause personal injury or damage to this unit!
	Note	● When the inverter is operating, you should avoid that objects fall into this unit.Otherwise cause damage to this unit! ● Do not start/stop the driver by switching on/off contactor. Otherwise cause damage to this unit!
When maintaining	Danger	● Do not perform repairs and maintenance for the live electrical equipment. Otherwise there is a risk of electric shock! ● The repairs and maintenance task can be performed only when the inverter bus voltage is lower than 36V,Otherwise, the residual charge from capacitor would cause personal injury! ● Non-well-trained professional personnel is not allowed to perform repairs and maintenance of inverter. Doing this may cause personal injury or damage to this unit! ● After replacing the inverter, parameter settings must be redone, all plugable plugs can be operated only in the case of powering off!

1-3. Precautions

No.	Type	Explanation
1	Motor insulation inspection	Please perform motor insulation inspection for the first time use, re-use after leaving unused for a long time as well as regular check, in order to prevent damage to the inverter because of the motor's winding insulation failure. Wiring between motor and inverter shall be disconnected, it is recommended that the 500V voltage type megameter should be adopted and insulation resistance shall be not less than 5MΩ.
2	Motor thermal protection	If the rated capacity of the selected motor does not match the inverter, especially when the inverter rated power is greater than

		the motor rated power, be sure to adjust the motor protection parameter values inside inverter or install thermal relay in the front of motor for motor protection.
3	Run over power frequency	The inverter output frequency rang is 0Hz to 3200Hz(Max.vector control only supports 300Hz). If the user is required to run at 50Hz or more, please consider the endurance of your mechanical devices.
4	Vibrations of mechanical device	Inverter output frequency may be encountered mechanical resonance point of the load device, you can set jump frequency parameter inside inverter to avoid the case.
5	Motor heat and noise	The inverter output voltage is PWM wave that contains a certain amount of harmonics, so the temperature rise, noise and vibration of motor show a slight higher than frequency power frequency operation.
6	Output side with piezoresistor or capacitor for proving power factor	The inverter output is PWM wave, if the piezoresistor for lightning protection or the capacitor for improving power factor is installed in the output side, which easily cause the inverter instantaneous overcurrent or even cause damage to the inverter. Please do not use.
7	Contactor or switch used in the inverter input/output terminals	If contactor is installed between power supply and inverter, the contactor is not allowed to start/stop the inverter. Necessarily need to use the contactor to control the inverter start/stop, the interval should not be less than one hour. Frequent charging and discharging may reduce the service life of the inverter capacitor. If the contactor or switch is equipped between output terminals and motor, the inverter should be turned on/off without output status, otherwise which easily lead to damage to the inverter module.
8	Use other than the ratedvoltage	PI series inverter is not suitable for use beyond the allowable operating voltage described in this manual, which easily cause damage to the parts inside inverter. If necessary, please use the corresponding transformer to change voltage.
9	Never change 3-phase input to 2-phase input	Never change PI series 3-phase inverter to 2-phase one for application. Otherwise it will lead to malfunction or damage to the inverter.
10	Lightning surge protection	The series inverter is equipped with lightning overcurrent protection device, so it has the ability of self-protection to lightning induction. For the area where lightning is frequent, user should also install the extra protection in the front of the inverter.
11	High altitude and derating application	When the inverter is used in areas over 1000m altitude, it is required to reduce frequency because the thin air will decrease the cooling effect of inverter. Please consult our technician for details on the application.
12	Special use	If the user need to use methods other than the suggested wiring diagram provided in this manual, such as common DC bus, please consult our technician.
13	Precautions for scrap disposal of the inverter	When electrolytic capacitors on the main circuit and printed circuit board as well as plastic parts are burned, it may produce toxic gases.Please disposing as industrial waste.
14	Adaptive motor	1) Standard adaptive motor shall be four-pole asynchronous squirrel-cage induction motor or permanent magnet synchronous motor. Apart from the said motors, please select the inverter according to the motor rated current. 2) The cooling fan and the rotor shaft for non-inverter motor are coaxially connected, the fan cooling effect is reduced when the

		rotational speed is reduced, therefore, when the motor works in overheating occasions, a strong exhaust fan should be retrofitted or replace non-inverter motor with the inverter motor. 3) The inverter has built-in the adaptive motor standard parameters, according to the actual situation, please identify motor parameters or accordingly modify the default values to try to meet the actual value, otherwise it will operation affect and protection performance; 4) When short-circuit of cable or motor internal will activate the inverter alarm, even bombing. Therefore, firstly perform insulation short-circuit test for the initial installation of the motor and cable, routine maintenance often also need to perform such test. Note that the parts to be tested and the inverter shall be disconnected completely when testing.
15	Others	1)We need to fix cover and lock before power on, so as to avoid the harm to personal safety that is caused by internal injuries of bad capacitors and other components. 2)Do not touch internal circuit board and any parts after powering off and within five minutes after keyboard indicator lamp goes out, you must use the instrument to confirm that internal capacitor has been discharged fully, otherwise there is a danger of electric shock. 3)Body static electricity will seriously damage the internal MOS field-effect transistors, etc., if there are not anti-static measures, do not touch the printed circuit board and IGBT internal device with hand, otherwise it may cause a malfunction. 4)The ground terminal of the inverter(E or ⏚) shall be earthed firmly according to the provisions of the National Electrical Safety and other relevant standards. Do not shut down(power off) by pulling switch, and only cut off the power until the motor stopping operation. 5)It is required to add the optional input filter attachment so as to meet CE standards.

1-4. Scope of applications

※ This inverter is suitable for three-phase AC asynchronous motor.

※ This inverter can only be used in those occasions recognized by this company, an unapproved use may result in fire, electric shock, explosion and other accidents.

※ If the inverter is used in such equipment (e.g: equipment for lifting persons, aviation systems, safety equipment, etc.) and its malfunction may result in personal injury or even death. In this case, please consult the manufacturer for your application.

Only the well-trained personnel can be allowed to operate this unit, please carefully read the instre1tions on safety, installation, operation and maintenance before use. The safe operation of this unit depends on proper transport, installation, operation and maintenance!

Chapter 2 Standard specifications

2-1. Technical specifications

Model	Input voltage	Rated output power(kW)	Rated input current(A)	Adaptive motor(kW)
PI500-S 5R5G1	Single phase AC220V±10%; Recommend DC 200～440V	5.5	25	5.5
PI500-S 5R5G2	Three phase AC220V±10%; Recommend DC 200～440V	5.5	25	5.5
PI500-S 7R5G2		7.5	32	7.5
PI500-S 011G2		11	45	11
PI500-S 015G2		15	60	15
PI500-S 018G2		18.5	75	18.5
PI500-S 022G2		22	90	22
PI500-S 030G2		30	110	30
PI500-S 037G2		37	152	37
PI500-S 045G2		45	176	45
PI500-S 055G2		55	210	55
PI500-S 075G2		75	304	75
PI500-S 7R5G3	Three phase AC380V±10%; Recommend DC 350～780V	7.5	17	7.5
PI500-S 011G3		11	25	11
PI500-S 015G3		15	32	15
PI500-S 018G3		18.5	37	18.5
PI500-S 022G3		22	45	22
PI500-S 030G3		30	60	30
PI500-S 037G3		37	75	37
PI500-S 045G3		45	90	45
PI500-S 055G3		55	110	55
PI500-S 075G3		75	150	75
PI500-S 093G3		93	176	93
PI500-S 110G3		110	210	110
PI500-S 132G3		132	253	132
PI500-S 160G3		160	304	160

Note: the power of solar cell components is recommended to be more than 1.2 times the solar inverter.

2-2. Standard specifications

Items		Specifications
Power Input	Input AC voltage frequency	Single phase 220V±10%，50/60Hz±5%; Three phase 220V±10%，50/60Hz±5% Three phase 380V±10%，50/60Hz±5%
	Recommend solar input DC voltage range	G1/G2:DC 200～440V； G3:DC 350～780V
Control system	Control system	High performance vector control inverter based on DSP
	Control method	V/F control, vector control W/O PG
	Automatic torque boost function	Realize low frequency (1Hz) and large output torque control under the V/F control mode.
	Acceleration/deceleration control	Straight or S-curve mode. Four times available and time range is 0.0 to 6500.0s.
	V/F curve mode	Linear, square root/m-th power, custom V/F curve
	Over load capability	G type:rated current 150% - 1 minute, rated current 180% - 2 seconds F type:rated current 120% - 1 minute, rated current 150% - 2 seconds
	Maximum frequency	1、Vector control:0 to 300Hz； 2、V/F control:0 to 3200Hz
	Carrier Frequency	0.5 to 16kHz; automatically adjust carrier frequency according to the load characteristics.
	Input frequency resolution	Digital setting: 0.01Hz Analog setting: maximum frequency×0.1%
	Start torque	G type: 0.5Hz/150% (vector control W/O PG)
	Speed range	1:100 (vector control W/O PG) 1:1000 (vector control W/ PG)
	Steady-speed precision	Vector control W/O PG: ≤ ± 0.5% (rated synchronous speed)
	Torque response	≤ 40ms (vector control W/O PG)
	Torque boost	Automatic torque boost; manual torque boost(0.1% to 30.0%)
	DC braking	DC braking frequency: 0.0Hz to max. frequency, braking time: 0.0 to 100.0 seconds, braking current value: 0.0% to 100.0%
	Jogging control	Jog Frequency Range: 0.00Hz to max. frequency; Jog Ac/deceleration time: 0.0s to 6500.0s
	Multi-speed operation	Achieve up to 16-speed operation through the control terminal
	Built-in PID	Easy to realize closed-loop control system for the process control.
	Automatic voltage regulation(AVR)	Automatically maintain a constant output voltage when the voltage of electricity grid changes
	Solar pump inverter special function	Maximum light power tracking, light and weak auto sleep, light intensity automatic awakening, high water level automatic stop, low water level automatic operation, under-load protection, etc
Personalization function	Self-inspection of peripherals after power-on	After powering on, peripheral equipment will perform safety testing, such as ground, short circuit, etc.
	Quick current limiting	The current limiting algorithm is used to reduce the inverter over current probability, and improve whole unit anti-interference capability.
	Timing control	Timing control function: time setting range(0m to 6500min)

Running	Input signal	Running method	Keyboard/terminal/communication
		Frequency setting	10 frequency settings available, including adjustable DC(0 to 10V)/ (0 to 20mA),analog quantity AI1/AI2, panel potentiometer, etc.
		Start signal	Rotate forward/reverse
		Multi-speed	At most 16-speed can be set(run by using the multi-function terminals or program)
		Emergency stop	Interrupt controller output
		Wobbulate run	Process control run
		Fault reset	When the protection function is active, you can automatically or manually reset the fault condition.
		PID feedback signal	Including DC(0 to 10V), DC(0 to 20mA)
	Output Signal	Running status	Motor status display, stop, ac/deceleration, constant speed, program running status.
		Fault output	Contact capacity :normally closed contact 3A/AC 250V，normally open contact5A/AC 250V，1A/DC 30V.
		Analog output	Two-way analog output, 16 signals can be selected such as frequency, current, voltage and other, output signal range (0 to 10V / 0 to 20mA).
		Output signal	At most 3-way output, there are 40 signals each way
	Run function		Limit frequency, jump frequency, frequency compensation, auto-tuning, PID control
	DC current braking		Built-in PID regulates braking current to ensure sufficient braking torque under no over-current condition.
	Running command channel		Three channels: operation panel, control terminals and serial communication port. They can be switched through a variety of ways.
	Frequency source		Total 11 frequency sources: digital, analog current, multi-speed and serial port. They can be switched through a variety of ways.
	Input terminals		6 digital input terminals, compatible with active PNP or NPN input mode, one of them can be for high-speed pulse input(0 to 100 kHz square wave); 3 analog input terminals for voltage or current input: AI1 & AI2 can select 0`10V or 0`20mA input, AI3 voltage -10`+10v input
	Output terminals		2 digital output terminals, one of them can be for high-speed pulse output(0 to 100kHz square wave); 2relay output terminal; 2 analog output terminals, respectively for optional range (0 to 20mA or 0 to 10V), they can be used to set frequency, output frequency, speed and other physical parameters.
Protection function	Inverter protection		Overvoltage protection, undervoltage protection, overcurrent protection, overload protection, overheat protection, overcurrent stall protection, overvoltage stall protection, losing phase protection (optional), communication error, PID feedback signal abnormalities, PG failure and short circuit to ground protection.
	IGBT temperature display		Displays current temperature IGBT
	Inverter fan control		Can be set
	Instantaneous power-down restart		Less than 15 milliseconds: continuous operation. More than 15 milliseconds: automatic detection of motor speed, instantaneous power-down restart.

	Speed start tracking method		The inverter automatically tracks motor speed after it starts
	Parameter protection function		Protect inverter parameters by setting administrator Password and decoding
Display	LED/OLED display keyboard	Running information	Monitoring objects including: running frequency, set frequency, bus voltage, output voltage, output current, output power, output torque, input terminal status, output terminal status, analog AI1 value, analog AI2 value, motor Actual running speed，PID set value percentage, PID feedback value percentage.
		Error message	At most save three error message, and the time, type, voltage, current, frequency and work status can be queried when the failure is occurred.
	LED display		Display parameters
	OLED display		Optional, prompts operation content in Chinese/English text.
	Copy parameter		Can upload and download function code information of frequency converter, rapid replication parameters.
	Key lock and function selection		Lock part or all of keys, define the function scope of some keys to prevent misuse.
Communication	RS485		The optional completely isolated RS485 communication module can communicate with the host computer.
Environment Product standard	Environment temperature		-10℃to 40℃ (temperature at 40 ℃to 50℃, please derating for use)
	Storage temperature		-20 ℃ to 65 ℃
	Environment humidity		Less than 90% R.H, no condensation.
	Vibration		Below 5.9m/s²(= 0.6g)
	Application sites		Indoor where no sunlight or corrosive, explosive gas and water vapor, dust, flammable gas,oil mist, water vapor, drip or salt, etc.
	Altitude		Below 1000m
	Pollution degree		2
	Protection level		IP20
Product standard	Product adopts safety standards.		IEC61800-5-1:2007
	Product adopts EMC standards.		IEC61800-3:2005
Cooling method			Forced air cooling

Chapter 3 Keyboard

3-1. Keyboard Description

Diagram 3-1:Operation panel display

3-2. Keyboard Indicators

Indicator **flag**		Name
Status lamp	RUN	Running indicator light * ON: the inverter is working * OFF: the inverter stops
	LOCAL/REMOTE	Command indicator light That is the indicator for keyboard operation, terminal operation and remote operation (communication control) * ON: terminal control working status * OFF: keyboard control working status * Flashing: remote control working status
	FWD/REV	Forward/reverse running light * ON: in forward status * OFF: in reversal status
	TUNE/TC	Motor self-learning/Torque control/Fault indicator * ON: in torque control mode * Slow flashing: in the motor tuning status * Quick flashing: in the fault status
Units combination indicator	HzAV	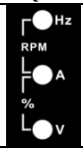

Hz	frequency unit
A	current unit
V	voltage unit
RPM	speed unit
%	percentage

3-3. Description of operation panel keys

Sign	Name	Function
PRG	Parameter Setting/Esc Key	* Enter into the modified status of main menu * Esc from functional parameter modification * Esc sub-menu or functional menu to status menu
>> SHIFT	Shift Key	*Choose displayed parameter circularly under running or stop interface; choose parameter's modified position when modify parameter
▲	Increasing Key	Parameter or function number increasing,set by parameter F6.18.
▼	Decreasing key	Parameter or function number decreasing, set by parameter F6.19.
RUN	Running key	For starting running in the mode of keyboard control status
STOP RST	Stomp/Reset Key	*For stopping running in the running status; for resetting the operation in fault alarm status. The function of the key is subject to F6.00
ENTER	Running key	For starting running in the mode of keyboard control status
QUICK	Quick multi-function key	This key function is determined by the function code F6.21.
	Keyboard encoder	* In query status, function parameter increasing or decreasing * In modified status, the function parameter or modified position increasing or decreasing. * In monitoring status, frequency setting increasing or decreasing

3-4. Keyboard display letters and numbers correspondence table

	Display letters	Corresponding letters	Display letters	Corresponding letters	Display letters	Corresponding letters
Digital display area	0	0	1	1	2	2
	3	3	4	4	5	5
	6	6	7	7	8	8
	9	9	A	A	b	B
	C	C	d	d	E	E
	F	F	H	H	I	I
	L	L	n	N	n	n
	o	o	P	P	r	r
	S	S	t	t	U	U
	T	T	-	.	_	-
	y	y				

3−5. Examples of parameter settings

3-5-1.Instructions on viewing and modifying function code

PI500-S inverter's operation pane is three levels menu for parameter setting etc.Three levels: function parameter group (Level 1)→function code(level 2)→function code setting(level 3). The operation is as following.

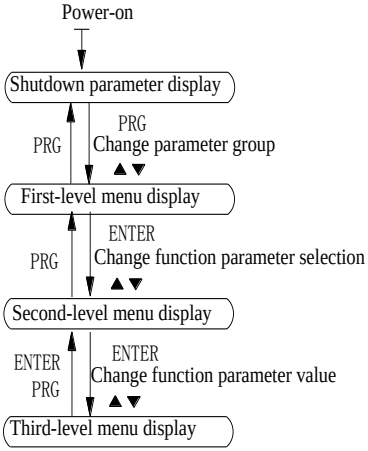

Description: Back to the level 2 menu from level 3 menu by PRG key or ENTER key in the level 3 operation status. The differences between the two keys : ENTER will be back to the level 2 menu and save parameter setting before back, and transfer to the next function code automatically; PRG will be back to the level 2 menu directly, not save parameter setting, then back to current function code.

Example 1 Frequency setting to modify parameters

Set F0.01 from 50.00Hz to 40.00Hz.

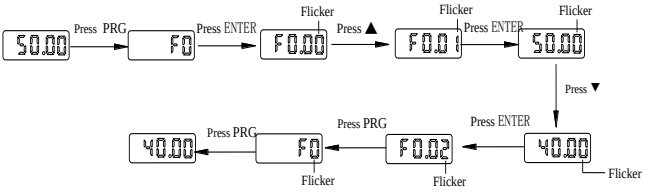

Example 2 :Restore factory settings

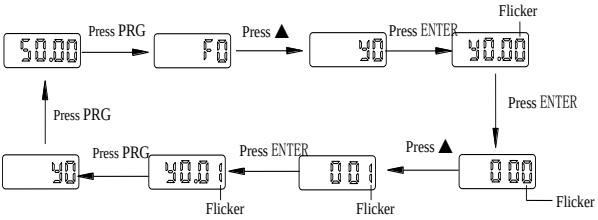

Without twinkling parameter position, the function code can not be modified in the level 3 menu. The reason maybe as following:

1) The function code can not be modified itself, eg: actual detecting parameters, running record parameters.

2) The function code can not be modified in the running status. It must be modified in the stop status.

3-5-2.The way to read parameters in various status

In stop or run status, operate shift key SHIFT to display a variety of status parameters respectively. Parameter display selection depends on function code F6.01 (run parameter 1), F6.02 (run parameter 2) and F6.03 (stop parameter 3).

In stop status, there are total 16 stop status parameters that can be set to display/not display: set frequency, bus voltage, DI input status, DO output status, analog input AI1 voltage, analog input AI2 voltage, panel potentiometer input voltage, Actual count value, Actual length value, PLC running step number, Actual speed display, PID settings, high-speed pulse input frequency and reserve, switch and display the selected parameter by pressing key orderly.

In running status, there are 5 running-status parameters:running frequency,setting frequency,bus voltage,output voltage, output current default display, and other display parameters: output power, output torque, DI input status, DO output status, analog input AI1 voltage, analog input AI2 voltage, panel potentiometer input voltage, Actual count value, Actual length value, linear speed, PID settings and PID feedback, etc, their display depends on function code F6.01 and F6.02 switch and display the selected parameter by pressing key orderly.

Inverter powers off and then powers on again, the displayed parameters are the selected parameters before power-off.

3-5-3.Password settings

The inverter has password protection. When y0.01 become not zero, it is the password and will be work after exit from function code modified status. Press PRG key again, will display”----”. One must input the correct password to go to regular menu, otherwise, inaccessible.

To cancel the password protection function, firstly enter correct password to access and then set y0.01 to 0.

3-5-4.Motor parameter auto turning

Choose vector control, one must input the motor’s parameters in the nameplate accurately before running the inverter. PI500 series frequency inverter will match the motor’s standard parameters according to its nameplate. The vector control is highly depend on motor’s parameters. The parameters of the controlled motor must be inputted accurately for the good control performance.

Motor parameter auto tuning steps are as follows:

Firstly select command source (F0.11=0) as the comment channel for operation panel, then input the following parameters according to the actual motor parameters (selection is based on the current motor):

Motor Selection	Parameters
Motor	b0.00: motor type selection b0.01: motor rated power b0.02: motor rated voltage b0.03: motor rated current b0.04: motor rated frequency b0.05: motor rated speed

For asynchronous motors

If the motor can NOT completely disengage its load, please select 1 (asynchronous motor parameter static auto turning) for b0.27, and then press the RUN key on the keyboard panel.

If the motor can completely disengage its load, please select 2 (asynchronous motor parameter comprehensive auto turning) for b0.27, and then press the RUN key on the keyboard panel, the inverter will automatically calculate the motor’s following parameters:

Motor Selection	Parameters
Motor	b0.06:asynchronous motor stator resistance b0.07:asynchronous motor rotor resistance b0.08:asynchronous motor leakage inductance b0.09: asynchronous motor mutual inductance b0.10: asynchronous motor no-load current

Complete motor parameter auto turning

Chapter 4 Installation and commissioning

4-1.Use of the environment

(1) Environmental temperature -10℃ to 50℃ Above 40℃,the capacity will decrease 3% by each 1℃.So it is not advisable to use inverter above 50℃

(2) Prevent electromagnetic interference, and away from interference sources.

(3) Prevent the ingress of droplets, vapor, dust, dirt, lint and metal fine powder.

(4) Prevent the ingress of oil, salt and corrosive gases.

(5) Avoid vibration.

(6) Avoid high temperature and humidity or exposure to rain, humidity shall be less than 90% RH (non-condensing).

(7) Altitude below 1000 meters

(8) Never use in the dangerous environment of flammable, combustible, explosive gas, liquid or solid.

4-2.Installation direction and space

PI500-S series inverter according to different power rating, the requirements of around installation reserve space is different, specifically as shown below:

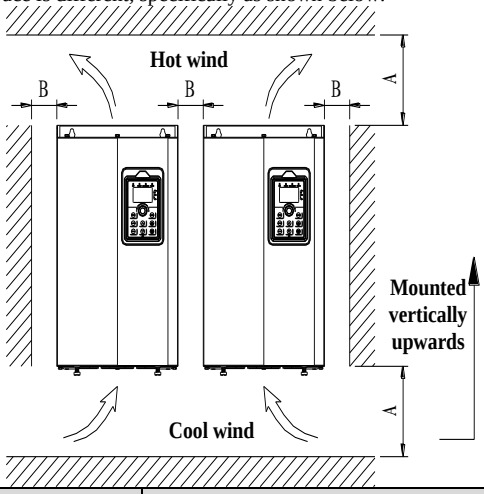

Power rating	Dimension requirement
7.5KW~22KW	A≥200mm；B≥10mm
30KW~75KW	A≥200mm；B≥50mm
90KW~160KW	A≥300mm；B≥50mm

Diagram 4-1：PI500 Series Each power level installation space requirement

PI500-S Series frequency inverter heat radiator circulated from bottom to top, when more than one inverter work together, usually mounted side by side. In the case of the need to install them by upper and lower rows, due to the heat of the lower inverters rising to the upper equipment, fault

maybe caused, heat insulation deflector and other objects to be installed.

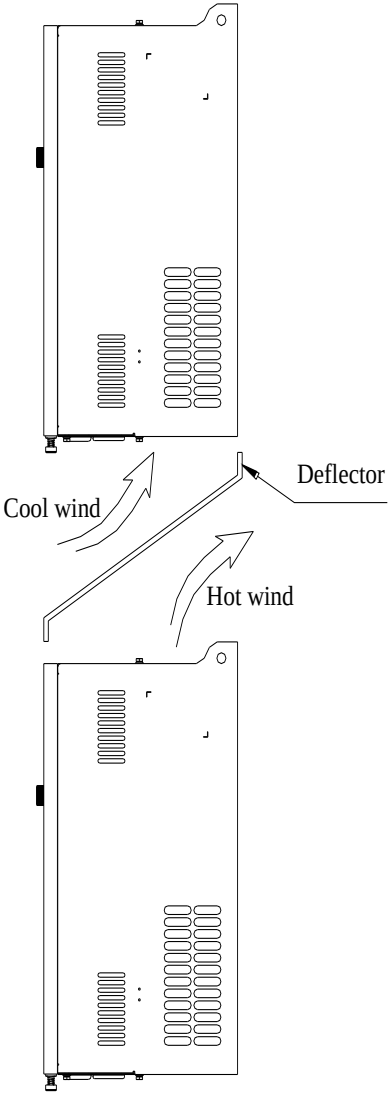

Diagram 4-2：Heat insulation deflector up and down installation diagram

4-3.Wiring Diagram

Frequency inverter wiring is divided by main circuit and control circuit. Users must properly connect frequency inverter in accordance with the wiring connection diagram showing below.

4-3-1.Function description of main circuit terminal

Terminal	Name	Explain

R S T	Inverter input terminals	Connect to three-phase power supply, single-phase connects to R, T; solar power connect to R, T
⏚	Ground terminals	Connect to ground
P, RB	Braking resistor terminals	Connect to braking resistor
U V W	Output terminals	Connect to three-phase motor
+, -	DC bus output terminals	Connect to braking unit
P, +	DC reactor terminals	Connect to DC reactor(remove the shorting block)

4-3-2.Control circuit terminals arrangement

Category	Symbol	Name	Function
Power supply	+10V-GND	＋10V power supply	Output +10V power supply, maximum output current: 10mA Generally it is used as power supply of external potentiometer, potentiometer resistance range: 1kΩ to 5kΩ
	+24V-COM	+24V power supply	Output +24V power supply, generally it is used as power supply of digital input and output terminals and external sensor. Maximum output current: 200mA
	PLC	External power input terminal	When external signal is used to drive, please unplug PLC jumpers , PLC must be connected to external power supply, and to +24V (default).
Analog input	AI1-GND	Analog input terminal 1	1.Input range:(DC 0V to 10V/0 to 20mA), depends on the selected AI1 jumper on control panel. 2.Input impedance: 20kΩ with voltage input, 510Ω with current input.
	AI2-GND	Analog input terminal 2	1.Input range:(DC 0V to 10V/0to 20mA), depends on the selected AI2 jumper on control panel. 2.Input impedance: 20kΩ with voltage input, 510Ω with current input.
	AI3-GND	Analog input terminal 3	1, Input range:DC-10V~+10V 2, Input voltage 20kΩ
Digital input	DI1	Multi-function digital input 1	1.Opto-coupler isolation, compatible with bipolar input, Jump line PLC selection decisions; 2.Input impedance: 4.7kΩ 3.Voltage range with level input: 19.2V to 28.8V;input impedance 3.3kΩ
	DI2	Multi-function digital input 2	
	DI3	Multi-function digital input 3	
	DI4	Multi-function digital input 4	
	DI5	Multi-function digital input 5	
	DI6	Multi-function digital input 6	
	DI7	Multi-function digital input 7	
	DI8	Multi-function digital input 8	
	DI5	High-speed pulse input	Except the function of DI1 to DI4,DI6 to DI8,DI5 can also be used as high-speed pulse input

Category	Symbol	Name	Function
		terminals	channels.Maximum input frequency: 100kHz
Analog output	DA1-GND	Analog output 1	The selected DA1 jumper on control panel determines voltage or current output. Output voltage range: 0V to 10V , output current range: 0mA to 20mA
	DA2-GND	Analog output 2	The selected DA2 jumper on control panel determines voltage or current output. Output voltage range: 0V to 10V , output current range: 0mA to 20mA
Digital output	SPA-COM	Digital output 1	Opto-coupler isolation, bipolar open collector output Output voltage range: 0V to 24V , output current range: 0mA to 50mA
	SPB-COM	Digital output 2	
	SPB-COM	High-speed pulse output	Subject to function code(F2.00)"SPB terminal output mode selection" As a high-speed pulse output, the highest frequency up to 100kHz;
Relay output	TA1-TC1	Normally open terminals	Contactor drive capacity: normally closed contact 3A/AC 250V，normally open contact 5 A/AC 250V, COSø = 0.4.
	TB1-TC1	Normally closed terminals	
Motor temperature inspection input	S1-S2-GND	PT100 inspect wire input	PT100 temperature sensor
Built-in RS485	485+	485 differential signal + terminal	485 communication interface, 485 differential signal terminal, use twisted-pair or shielded wire connect to the standard 485 communication interface 485 jump line in the control panel to decide whether to connect the terminal resistance
	485-	485 differential signal - terminal	
Auxiliary interface	J13	communication interface	CAN card, 26-pin terminal
	J10	PG card interface	12-pin terminal
	GND	GND ground interface	GND jump line decide whether to connect PE, improve the inverter anti-interference
	COM	COM ground interface	COM jump line decide whether to connect PE, improve the inverter anti-interference
	H1	COM Terminal interface	Consistent with the COM function on the terminal line。

4-3-3.Wiring diagram

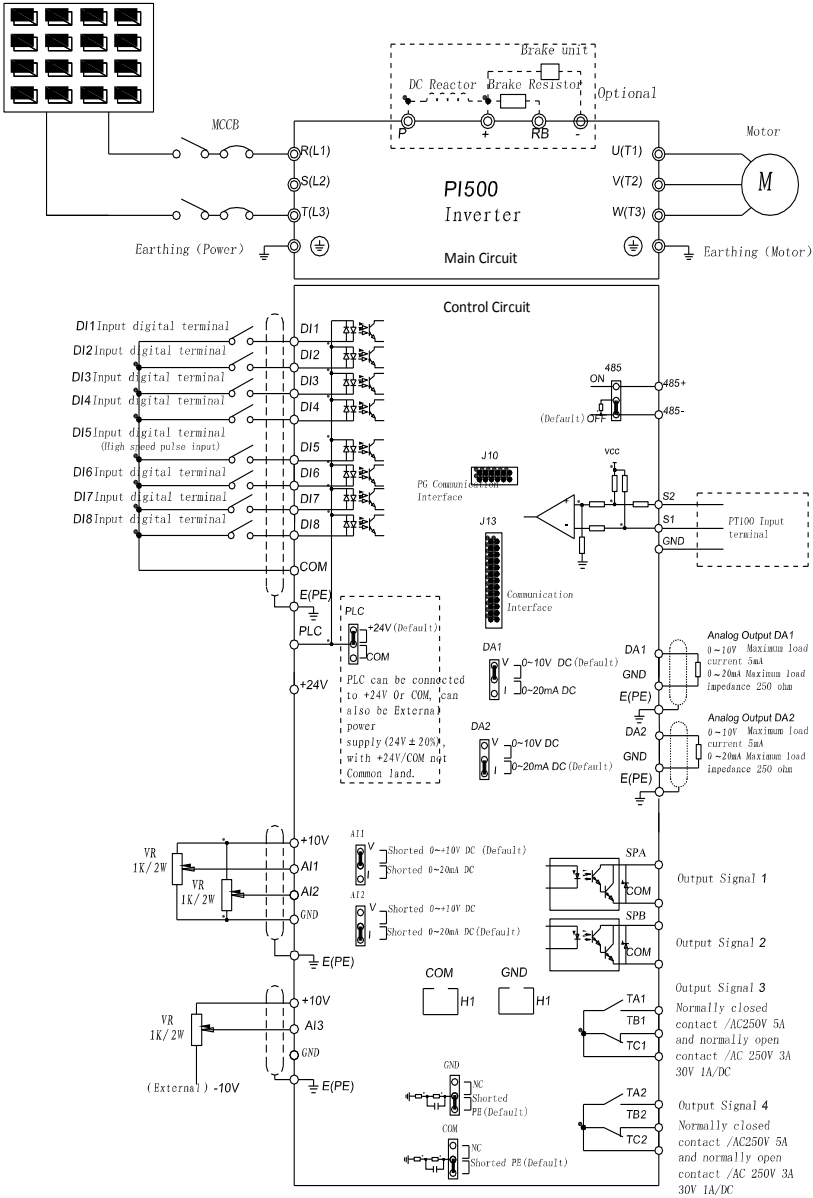

Diagram 4-3：Wiring diagram

1. Wiring in accordance with the wiring diagram and closing the switch Q1 after checking the corrected wiring.

Note: the AC power and photovoltaic power can not simultaneously supply power to the inverter, can only choose one from them.

2. y0.00=1(Factory Reset); Set b0.00 ~ b0.05 motor parameters according to the motor nameplate

3. Set F0.03 = 8 (PV settings); E0.00 = 2 (MPPT mode);

4. Water amount test. After setting the parameters, press the RUN key, observe the operating frequency and the water situation. In normal light conditions, when the running frequency is high but the water is running less, it indicates motor reversal phenomenon and need to modify the F0.24 = 1, then observe the water amount.

5. Set point of failure and fault reset time delay settings. If customer needs to use the weak light, full of water, under-load, can set detection point, the number of automatic reset and automatic reset time are set as per customer's request.

Take 380V voltage rating as an example:

There are two modes of inverter sleep, one for detecting bus voltage, the other is detecting frequency value.

Bus voltage sleep mode:

(1) When the sunlight is weak, the frequency inverter turn into hibernation. When the sunlight is strong, the frequency inverter automatically wakes. Set E0.07 ~ E0.08 voltage detection value.

Parameter settings: F0.03 = 8 (PV settings);E0.00 = 2 (MPPT mode);E0.07 = 530 (PV wake voltage);E0.08 = 400 (PV dormant voltage);

If the frequency inverter operate normally and when the sunlight is weak, the bus voltage becomes less than 400V, then the frequency inverter enters into hibernation. When the sunlight is strong, the bus voltage is greater than 530V, the frequency inverter will automatically start running. Set the voltage of PV wake and sleep according to the situation. The two values can not be set at too close, if setting too close, the frequency inverter may start and stop frequently.

Detect frequency sleep mode:

Parameter setting: F6.13 = 1 (sleep mode on); E0.03 = 30s (wake-up time after sleep);E0.09 = 20Hz (sleep frequency);E0.11 = 60s (sleep waiting time)

Assuming the inverter is running, the frequency is below 20Hz, run for 60s below 20Hz, the inverter will stop and enter the sleep mode, wait for 60seconds inverter to restart after running.

(2) Water level detection mode 1- Switch detection.

When using the switch detection, the test line lead to DI terminal, Then the corresponding terminal is set to 8. If used as a feedback input signal DI2, DI2 = 8. When filled with water, DI2 signal is active, the frequency inverter will free stop. When the water level is below the detection value, the corresponding terminal is set to 1. (As with DI1 as the start signal, DI1=1), frequency inverter starts automatically.

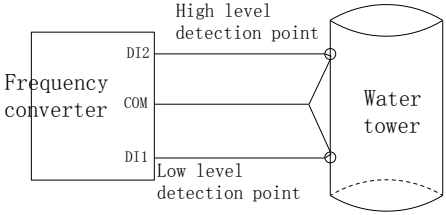

Connect the test line according to the figure.

Set parameters: F0.03 = 8 (PV settings);

F0.11 = 4 (keyboard + Terminal + communication);

F1.00 = 1 (forward run);

F1.01 = 8 (freewheel);

F1.10 = 2 (three-wire mode 1)

E3.02 = 3 (three-wire operation control);

E3.05 = 00100;

E0.00 = 2 (MPPT mode);

After setting the parameters, press the RUN key, frequency inverter runs. If water reaches the high lever detection point, the frequency inverter will free stop. When the water level falls below the low level detection point, the frequency inverter automatically starts running.

(3) Water level detection mode 2- Analog detection.

When using analog detection，Connect the detection cable to the AI terminal. according to the wiring diagram. Water-filled test point voltage is 7V. When AI1 detects 7V voltage, the frequency inverter will free stop. When AI1 detects voltage is lower than 3V , the frequency inverter automatically starts running.

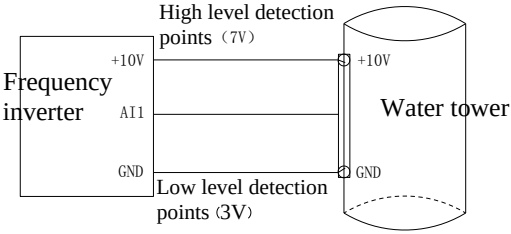

Set parameters:

F0.03=8(PV setting)；

E0.00=2(MPPT mode)；

E3.07=10(run pause)；

After setting the parameters, press the RUN key. When AI1 voltage is below 7V,inverter runs; If the water tower above the high level detection point, the inverter belongs to standby status. Until the water level is below the low water level detection point(AI1 less than 3V), the frequency inverter automatically starts running.

(4) Pump under-load detection mode 1

The water pump under load test is mainly for the water in the well is drained, frequency inverter determine whether to run the water pump by setting a reference value.F0.03=8(PV setting)；

F8.30=1(off-load protection choose effective)；

F8.31.= d0.04÷b0.03, suggests to subtract 0.05 to 0.1 based on the calculated result.

F8.32=(off overload detection time, suggests to set as 60s)

E0.00=2(MPPT mode)；

E0.10=300s(set out interval detection time)

Assuming the b0.03 = 5.1A, when pumping, d0.04 displayed as 4A, F8.31=4÷5.1=0.78,suggests to subtract by 0.05 to 0.1. F8.31 should be set between 68.4% - 73.4% (F8.31is set according to the actual situation). When setting F8.31 = 68.4%, current is less than 3.48, the delay time F8.32 is set to 60 (suggests to subtract setting time by 1Min ~ 3Min,set according to the actual situation), the inverter will free stop. E0.10 set out interval contained detectable, the frequency inverter runs automatically set off again into the detection status. If the pool is still no water detected, the frequency inverter will free stop again.

(5) Pump under-load detection mode 2

After water pump out of the well, the inverter will shut down automatically.

Install level detection switch at a low water and the test line lead to DI terminal. DI terminal function selection is set to free stop and start forward. When the water level falls below the low level detection point, DI2 signal is active and the frequency inverter will free stop. When the water level is higher than the starting value detected,the frequency inverter starts automatically.

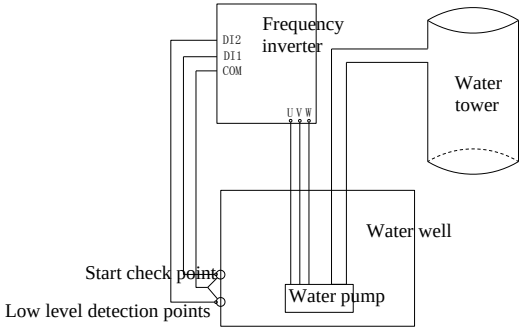

Parameters setting:
F0.03=8(PV setting);
F0.11=4(keyboard+ terminals+ Communications);
F1.00=1(forward run);
F1.01=8(freewheel);
F1.10=2(three-wire mode 1);
F1.40=1(input terminal can repeat the definitions);
E3.02=3(three-wire operation control);
E3.05=00100;
E0.00=2(MPPT mode);
F1.35=00000

Mark: If the water tower is set to switch value detection, the well is also set to switch value detection. Set F1.40 to the input terminal which can be reusable definitions.

4-4.Wiring Precautions

Danger
Make sure that the power switch is in the OFF state before wiring operation, or electrical shock may occur! Wiring must be performed by a professional trained personnel, or this may cause damage to the equipment and personal injury! Must be grounded firmly, otherwise there is a danger of electric shock or fire hazard !
Note
Make sure that the input power is consistent with the rated value of inverter, otherwise which may cause damage to the inverter! Make sure that the motor matches the inverter, otherwise which may cause damage to the motor or activate the inverter protection! Do not connect power supply to U, V, W terminals, otherwise which may cause damage to the inverter! Do not directly connect braking resistor to DC bus (P), (+) terminals, otherwise which may cause a fire!

※The U,V,W output end of inverter can not install phase advancing capacitor or RC absorbing device. The inverter input power must be cut off when replacing the motor

※Do not let metal chips or wire ends into inside the inverter when wiring, otherwise which may cause malfunction to the inverter.

※ Disconnect motor or switch power-frequency power supply only when the inverter stops output

※In order to minimize the effects of electromagnetic interference, it is recommended that a

surge absorption device shall be installed additionally when electromagnetic contactor and relay is closer from the inverter.

※External control lines of inverter shall adopt isolation device or shielded wire.

※In addition to shielding, the wiring of input command signal should also be aligned separately, it is best to stay away from the main circuit wiring.

※If the carrier frequency is less than 3KHz, the maximum distance between the inverter and the motor should be within 50 meters; if the carrier frequency is greater than 4KHz, the distance should be reduced appropriately, it is best to lay the wiring inside metal tube.

※When the inverter is additionally equipped with peripherals (filter, reactor, etc.), firstly measure its insulation resistance to ground by using 1000 volt megger, so as to ensure the measured value is no less than 4 megohms.

※When the inverter need to be started frequently, do not directly turn power off, only the control terminal or keyboard or RS485 operation command can be used to control the start/stop operation, in order to avoid damage to the rectifier bridge.

※ Do not connect the AC iutput to inverter output terminals U, V, W .

※To prevent the occurrence of an accident, the ground terminal(⏚)must be earthed firmly(grounding impedance should be less than 10 ohms), otherwise the leakage current will occur.

※The specifications on wires used by the main circuit wiring shall comply with the relevant provisions of the National Electrical Code.

※The motor's capacity should be equal to or less than the inverter's capacity.

4-5.Commissioning

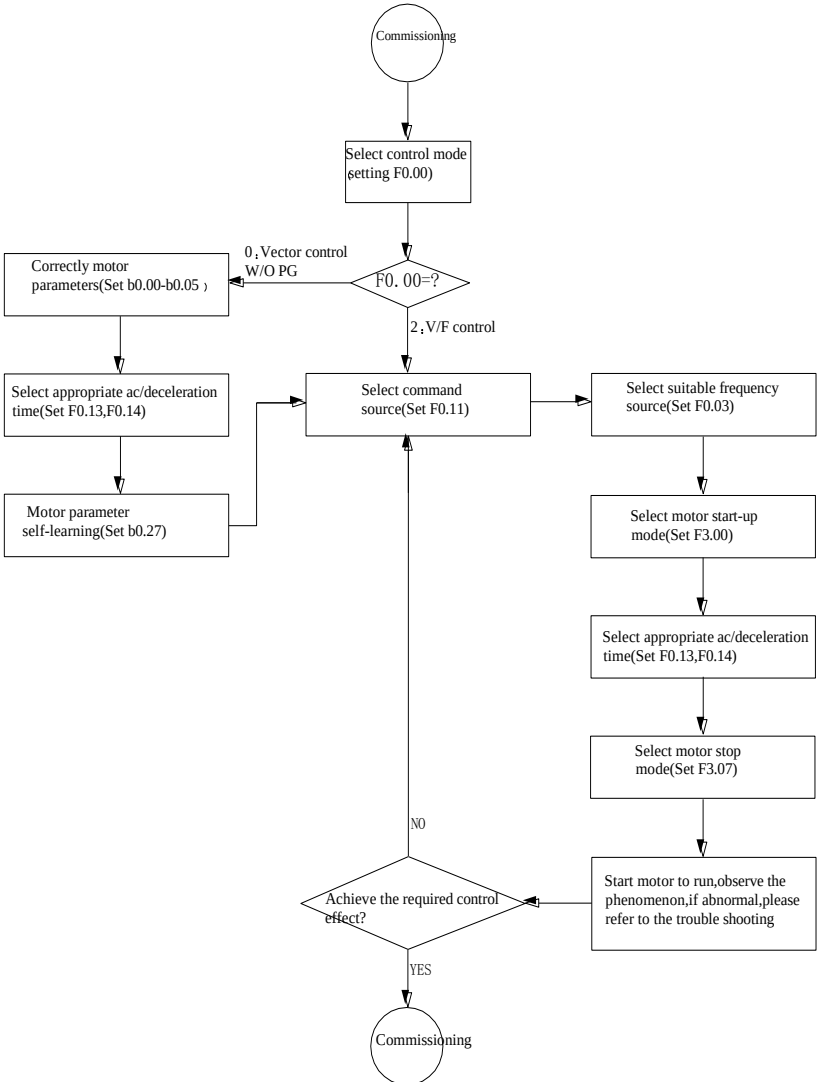

●Firstly confirm that AC input power supply voltage shall be within inverter rated input voltage range before connecting power supply to the inverter.

●Connect power supply to the R, S and T terminals of the inverter. or solar power to the R, T input terminals of the inverter.

●Select the appropriate operation control method.

Chapter 5 Function parameter

5-1. Menu grouping

Note:

"★": In running status, can not modify the parameter setting

"●": The actual testing data, can not be modified

"☆": In stop and run statuses, both can be changed;

"▲": "Factory parameter", no change about it.

"_" means the factory parameter is related to power or model. Please check the details in the involved parameter introduction.

Note:"Italic 3"means software version is C3.00 and the keyboard just like the above with MCU can do the functions.

Change limit refers to whether the parameters are adjustable.

y0.01 is used for parameters protection password. Parameter menu can be enter into only after inputting the right password in the function parameter mode or user change parameter mode. When the y0.01 set to 0, the password is canceled.

Parameter menu is not protected by password under user customized parameters mode.

F group is the basic function parameters,E group is to enhance function parameters, b group is a function of motor parameters,d group is the monitoring function parameters.

PI500-S series frequency inverter, some parameters is "manufacturers retain", the serial number in the function parameter list is not listed, resulting in some of the parameters of the table number is not connected, For the parameters not described in the manual, please do not try to modify to avoid causing errors.

Code	Parameter name	Functional Description
d0	Monitoring function group	Monitoring frequency, current, etc
F0	Basic function group	Frequency setting, control mode.
F1	Input terminals group	Analog and digital input functions
F2	Output terminals group	Analog and digital output functions
F3	Start and stop control group	Start and stop control parameters
F4	V/F control parameters	V/F control parameters
F6	Keyboard and display	To set key and display function parameters
F7	Auxiliary function group	To set Jog, jump frequency and other auxiliary function parameters
F8	Fault and protection	To set fault and protection parameters
F9	Communication parameter group	To set MODBUS communication function
FB	Control optimization parameters	To set parameters of optimizing the control performance
E0	Solar pump special group	Solar pump special parameter setting
E2	PID function group	To set Built-in PID parameters
E3	Virtual DI, Virtual DO	Virtual I/O parameter setting
b0	Motor parameters	To set motor parameter

y0	Function code management	To set password, parameter initialization and parameter group display
y1	Fault query	Fault message query

5-1-1.d0Group - Monitoring function group

No.	Code	Parameter name	Setting range	Factory setting
1	d0.00	Running frequency	Actual output frequency	0.01Hz
2	d0.01	Set frequency	Actual set frequency	0.01Hz
3	d0.02	DC bus voltage	Detected value for DC bus voltage	V
4	d0.03	output voltage	Actual output voltage	V
5	d0.04	output current	Effective value for Actual motor current	0.01A
6	d0.05	output power	Calculated value for motor output power	0.1kW
7	d0.07	DI input status	DI input status	-
8	d0.08	DO output status	DO output status	-
9	d0.09	AI1 voltage (V)	AI1 input voltage value	0.01V
10	d0.10	AI2 voltage (V)	AI2 input voltage value	0.01V
11	d0.11	AI3 voltage (V)	AI3 input voltage value	0.01V
12	d0.14	Actual operating speed	Motor actual running speed	-
13	d0.15	PID setting	Reference value percentage when PID runs	%
14	d0.16	PID feedback	Feedback value percentage when PID runs	%
15	d0.18	High-speed pulse input frequency	High-speed pulse input frequency display, unit: 0.01Khz	0.01kHz
16	d0.20	Remaining run time	Remaining run time display, it is for timing run control	0.1Min
17	d0.22	Current power-on time	Total time of current inverter power-on	1Min
18	d0.23	Current run time	Total time of current inverter run	1Min
19	d0.24	HDI(DI5) impulse frequency	HDI(DI5) High-speed impulse input frequency display, unit: 1Hz	1Hz
20	d0.25	Communication set value	Frequency, torque or other command values set by communication port	0.01%
21	d0.27	Master frequency display	Frequency set by F0.03 master frequency setting source	0.01Hz
22	d0.29	Command torque (%)	Observe the set command torque under the torque control mode	0.1%

23	d0.36	Inverter type	G type (constant torque load type)	-
24	d0.37	AI1 voltage before correction	Input voltage value before AI1 linear correction	0.01V
25	d0.38	AI2 voltage before correction	Input voltage value before AI2 linear correction	0.01V
26	d0.39	AI3 voltage before correction	Input voltage value before AI3 linear correction	0.01V
27	d0.41	motor temperature inspection function3	PT100 inspect motor temperature value	0℃

5-1-2.F0 Group -Basic function group

Code	Parameter name	Setting range		Factory range	Change Limit
F0.00	Motor control manner	Vector control W/O PG	0	2	★
		Reserved	1		
		V/F control	2		
0:Vector control without PG Refers to the open-loop vector control for high-performance control applications typically , only one inverter to drive a motor. 1:Reserved 2:V/F control Suitable for less precision control applications, such as fan and pump loads. Can be used for an inverter drives several m`otors occasions. Note: Vector control mode, the drive capacity and the level of motor capacity difference can't be too large, the drive motor can power level than the big two or a small one, otherwise it may result in degradation of the control performance or the drive system does not work properly.					
F0.01	Keyboard set frequency	0.00Hz～F0.19(maximum frequency)		50.00Hz	☆
F0.03	Frequency source master setting	Frequency setting by Keyboard (F0.01,UP/DOWN can be modified, power-down without memory)	0	8	★
		Frequency set by Keyboard (F0.01,UP/DOWN can be modified, power-down without memory)	1		
		Analog AI1 setting	2		
		Analog AI2 setting	3		
		Panel potentiometer setting	4		
		High-speed pulse setting	5		
		Multi-speed operation setting	6		
		Simple PLC program setting	7		
		PV setting	8		
		PID control setting			
		Remote communications setting	9		
		Analog AI3 setting	10		
Select inverter master reference frequency input channels. There are 10 master reference frequency channels in all: 8:PV setting/PID control setting (1)PV setting, Solar pump functions is effective when E0 group of Solar pump special group select 1 or 2, It's belong to PID control setting if not setting E0.00=1 or 2.					

(2) Select process PID control output as the operating frequency. Generally it is used for closed-loop control, such as constant pressure closed-loop control, constant tension closed-loop control, solar pump dedicated and other occasions.

Select PID as the frequency source, you need to set E2 group "PID function"parameters.

F0.11	Command source selection	Keyboard control (LED off)	0	4	☆
		Terminal block control (LED on)	1		
		Communications command control (LED flashes)	2		
		Keyboard control+ Communications command control	3		
		Keyboard control+ Communications commandcontrol+ Terminal block control	4		
F0.13	Acceleration time1	0.0s～6500s		-	☆
F0.14	Deceleration time1	0.0s～6500s		-	☆
F0.19	Maximum output frequency	50.00Hz～320.00Hz		50.00Hz	★
F0.20	Upper limit frequency source	F0.21 setting	0	0	★
		Analog AI1 setting	1		
		Analog AI2 setting	2		
		Panel potentiometer setting	3		
		High-speed pulse setting	4		
		Communication reference	5		
		Analog AI3 setting	6		

Setting upper limit frequency. The upper limit frequency can be set from either digital setting (F0.21) or analog input channels. If the upper limit frequency is set from analog input, the set 100% of analog input is relative to F0.21.

To avoid the "Runaway", the setting of upper limit frequency is required, when the inverter reaches up to the set upper limit frequency value, the inverter will remain operation at the upper limit frequency, no further increase.

F0.21	Upper limit frequency	F0.23(lower limit frequency)~F0.19(maximum frequency)	50.00Hz	☆
F0.23	Lower limit frequency	0.00Hz～F0.21(upper limit frequency)	0.00Hz	☆

When the frequency command is lower than the lower limit frequency set by F0.23, the inverter can shut down, and then run at the lower limit frequency or the zero speed; the running mode can be set by F7.18.

F0.24	Running direction	same direction	0	0	☆
		opposite direction	1		

By changing the parameters, the motor steering can be achieved without changing the motor wiring, which acts as the adjustment of any two lines(U, V, W) of the motor to achieve the conversion of the motor rotation direction.

Note: after the parameter is initialized, the motor running direction will be restored to its original status. When the system debugging is completed, please use with caution where the change of motor steering is strictly prohibited.

F0.26	PV reduced frequency curve	Reduced frequency curve1	0	1	☆
		Reduced frequency curve2	1		
		Reduced frequency curve3	2		
		Reduced frequency curve4	3		

Down-conversion curve can make the inverter output frequency quickly decline, to avoid power shortage lead to undervoltage. curve 4 is the fastest down, and curve 1 is the slowest. after modify the parameters, power-on again then it effective.

5-1-3.F1 Group - Input terminals group

Code	Parameter name	Setting range	Factory setting	Change
F1.00	DI1 terminal function selection	0～51	1	★
F1.01	DI2 terminal function selection		2	★
F1.02	DI3 terminal function selection		0	★
F1.03	DI4 terminal function selection		9	★
F1.04	DI5 terminal function selection		12	★
F1.05	DI6 terminal function selection		13	★
F1.06	DI7 terminal function selection		0	★
F1.07	DI8 terminal function selection		0	★

Set value	Function	Description
0	No function	The terminal for not use can be set to "no function" to prevent accidental operation.
1	Forward run (FWD)	External terminals are used to control the FWD/REV run mode of inverter.
2	Reverse run (REV)	
3	Three-wire operation control	This terminal is used to determine the inverter's three-wire control mode. For details, please refer to the instructions of function code F1.10 ("terminal command mode).
4	Forward JOG(FJOG)	FJOG means Forward JOG running, RJOG means,reverse JOG running. For Jog running frequency and Jog Ac/deceleration time, please refer to the description of the function code F7.00, F7.01, F7.02.
5	Reverse JOG(RJOG)	
6	Terminal UP	Modify frequency increment/decrement command when the frequency is referenced by external terminal. Adjust up/down the set frequency when the digital setting is selected as the frequency source.
7	Terminal DOWN	
8	Free stop	The inverter output is blocked, at the time, the parking process of motor is not controlled by the inverter. This way is same as the principle of free stop described in F3.07.
9	Fault reset (RESET)	The function makes use of terminal for fault reset. It has same function with RESET key on the keyboard. This function can be used to realize remote fault reset.
10	Run pause	The inverter slows down and stops, but all operating parameters are memorized. Such as PLC parameters, PID parameters. This terminal signal disappears, the inverter reverts to the previous state of running before parking.
11	External fault normally open input	When the signal is sent to the inverter, inverter trips fault Err.15, and performs troubleshooting according to fault protection action (details refer to function code F8.17)
Option 12 ~ 51omitted, If more choices needed, pleasecontact us.		

F1.10	Terminal command mode	Two-wire type 1	0	0	★
		Two-wire type 2	1		
		Three-wire type 1	2		
		Three-wire type 2	3		

This parameter defines four different modes to control inverter operation through external terminals.

0:Two-wire type 1

This mode is the most commonly used two-wire mode. The forward/reverse operation of motor is determined by terminal DIx, DIy.

The terminal function is set as follows:

Terminals	Set value	Description
DIx	1	Forward run(FWD)
DIy	2	Reverse run(REV)

Of which, DIx and DIy are the multi-function input terminals of DI1 to DI10, the level is active.

K1	K2	Command
0	0	Stop
0	1	REV
1	0	FWD
1	1	Stop

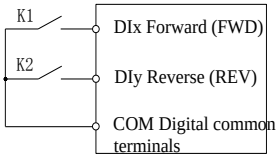

1:Two-wire type 2

In the mode, DIx terminal is used as running enabled, while DIy terminal is used to determine running direction.

The terminal function is set as follows:

Terminals	Set value	Description
DIx	1	Forward run(FWD)
DIy	2	Reverse run(REV)

Of which, DIx and DIy are the multi-function input terminals of DI1 to DI10, the level is active.

K1	K2	Command
0	0	Stop
0	1	Stop
1	0	FWD
1	1	REV

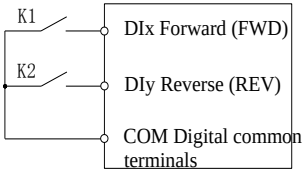

Two-wire mode 2

2:Three-wire control mode 1

For this mode,DIn is used as enabled terminal,while DIx and DIy terminal are used to control direction.The terminal function is set as follows:

Terminal	Set value	Description
DIx	1	Forward run(FWD)
DIy	2	Forward run(REV)
DIn	3	Three-wire operation control

To run, firstly close DIn terminal, the motor run signal is generated by the ascendant edge of DIx, the motor direction signal is generated by DIy status

To stop, you must disconnect DIn terminal signals Of which, DIx, DIy and DIn are the multi-function input terminals of DI1 to DI10, DIx is for active pulse, DIy and DIn are for active level.

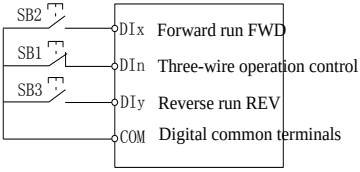

Three-wire control model 1

Of which:SB1:Stop button SB2:Forward button SB3:Reverse button

3:Three-wire control mode 2

For this mode,DIn is the enabled terminal,,the runing commands are given by DIy,the

direction is determined by the state of DIy.

The terminal function is set as follows:

Terminal	Set value	Description
DIx	1	Forward run(FWD)
DIy	2	Reverse run(REV)
DIn	3	Three-wire operation control

To run, firstly close DIn terminal, the motor run signal is generated by the ascendant edge of DIx, the motor direction signal is generated by DIy status

To stop, you must disconnect DIn terminal signals Of which, DIx, DIy and DIn are the multi-function input terminals of DI1 to DI10, DIx is for active pulse, DIy and DIn are for active level.

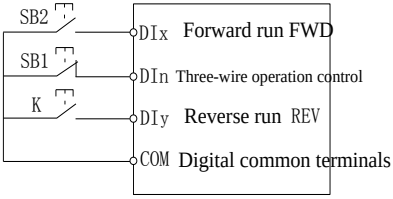

K	Command
0	FWD
1	REV

Three-wire control model 2

Of which:SB1:stop button SB2:Run button

F1.12	AIC1 Minimum input	0.00V～F1.14	0.00V	☆
F1.13	F1.12 corresponding setting	-100%～+100.0%	0.0%	☆
F1.14	AIC1 Maximum input	F1.12～+100%	10.00V	☆
F1.15	F1.14 corresponding setting	-100%～+100.0%	100.0%	☆
F1.16	AIC2 Minimum input	0.00V～F1.14	0.00V	☆
F1.17	F1.16 corresponding setting	-100%～+100.0%	0.0%	☆
F1.18	AIC2 Maximum input	F1.12～+100%	10.00V	☆
F1.19	F1.18 corresponding setting	-100%～+100.0%	100.0%	☆
F1.35	DI Terminal Mode Selection 1	Unit digit: DI1 Terminal active state set High level active: 0 Low level active: 1 Ten digit: DI2 Terminal active state set(0-1,same as the units digit) Hundreds digit: DI3 Terminal active state set(0-1,same as the units digit) Thousand digit: DI4 Terminal active state set(0-1,same as the units digit) Ten thousands digit: DI5 Terminal active state set(0-1,same as the units digit)	00001	★
F1.37	DI1 delay time	0.0s～3600.0s	0.0s	★
F1.38	DI2 delay time	0.0s～3600.0s	0.0s	★
F1.39	DI3 delay time	0.0s～3600.0s	0.0s	★
F1.40	Define the input terminal repeat	0:unrepeatable；1:repeatable	0	★

5-1-4.F2 Output terminal group

Code	Description/Keyboard display	Setting range		Factory setting	Change
F2.00	SPB terminal output selection	High speed pulse output	0	0	☆
		Switching output	1		

SPB terminals are programmable multiplex terminal can be used as high-speed pulse output terminal,it can also be used as open collector output terminal.

As a high-speed pulse output, the maximum frequency of the output pulse is 100kHz, high-speed pulse output of the correlation function refer to Note F2.06.

F2.01	Switching quantity output function selection (Open collector output terminal)	0～40	0	☆
F2.02	Relay 1 output function selection (TA1.TB1.TC1)	0～40	2	☆
F2.03	Undefined			
F2.04	SPA output function selection (collector open circuit output terminals)	0～40	1	☆
F2.05	Relay 2 output function selection (TA2.TB2.TC2)	0～40	1	☆

Above 5 function code is used to select five digital output function. Multifunctional output terminal functions are as follows:

Seting value	Functions	Description
0	No output	No output action
1	Inverter running	Inverter is in running state, the output frequency (can be zero), the output ON signal.
2	Fault output (fault down)	When the drive fails and downtime, the output ON signal.
3	Frequency level detection FDT1 output	Please refer to the function code F7.23, F7.24's instructions.
4	Frequency arrival	Please refer to the description of function code F7.25.
5	Zero-speed running (no output when shutdown)	Inverter operation and the output frequency is 0, output ON signal.When the drive is shut down, the signal is OFF.
6	Motor overload pre-alarm	Before the motor overload protection, according to the overload pre-alarm threshold value judgment, more than the pre-alarm threshold value output ON signal. Motor overload parameter settings refer to the function code F8.02 ~ F8.04.
7	Inverter overload pre-alarm	Before the inverter overload occurs 10s, output ON signal.Setup counter arrive
11	PLC cycle is complete	After simple PLC completes one cycle, the output of a pulse width of 250ms signal.
12	Total running time arrival	Inverter total running time of more than F7.21 F6.07 set time,the output ON signal.
13	Limited in frequency	When the set frequency exceeds the upper limit frequency or lower frequency, and output frequency is beyond the upper limit frequency or lower limit frequency, output ON signal.
14	Torque limiting	Drive under the speed control mode, when the output torque reaches the torque limit, the inverter is stall protection status, while the output ON signal.
15	Ready to run	When the inverter main circuit and control circuit power supply has stabilized, and the drive does not detect any fault information, the drive is in an operational state, output ON signal.
16	AI1>AI2	When the value of the analog input AI is greater than the value of AI2 input and output ON signal.
17	Upper frequency arrival	When the operating frequency reaches the upper frequency, output ON signal.
18	The lower frequency arrival	When the operating frequency reaches the lower

	(no output when shutdown)	frequency, output ON signal. The next stop status signal is OFF.
19	Under voltage state output	When the inverter is in an undervoltage condition, output ON signal.
20	Communication setting	Refer to the communication protocol.
23	Zero-speed operation 2 (shutdown also output)	The inverter's output frequency is 0, output ON signal. The signal is also ON when shutdown.
24	Cumulative power-on time arrival	When the inverter's accumulated power on time (F6.08) over F7.20 the set time, the output ON signal.
25	Frequency level detection FDT2 output	Please refer to the function code F7.26, F7.27's instructions.
26	Frequency 1 reaches output	Please refer to the function code F7.28, F7.29's instructions.
27	Frequency 2 reaches output	Please refer to the function code F7.30, F7.31's instructions.
28	Current 1 reaches output	Please refer to the function code F7.36, F7.37's instructions.
29	Current 2 reaches output	Please refer to the function code F7.38, F7.39's instructions.
30	Timing reach output	When the timer function selection (F7.42) is valid, the drive time to reach this run after the set time runs out, output ON signal.
31	AI1 input overrun	When the value of analog input AI1 greater than F7.51 (AI1 input protection limit) or less than F7.50 (AI1 input protection under), output ON signal.
32	Off load	When the inverter is off-load state, output ON signal.
33	Reverse operation	Inverter in reverse run, output ON signal
34	0 current state	Refer to the description of function code F7.32, F7.33.
35	Module temperature reaches	Inverter module heatsink temperature (F6.06) reach the set module temperature reaches value (F7.40), output signal ON.
36	Software current limit	Please refer to the function code F7.34, F7.35's instructions.
37	The lower frequency arrival (stop and output)	When the operating frequency reaches the lower limit frequency, output ON signal. In shutdown state of the signal is also ON.
38	Alarm output	When the inverter failure, and the failure of the process to continue to run mode, the inverter alarm output.
39	Motor over-temperature pre-warning	When the motor temperature reaches F8.35 (motor overheat pre-alarm threshold), the output ON signal. (Motor temperature can be viewed at d0.41)
40	Current running time of arrival	When the inverter starts running time is longer than the time set by F7.45, it outputs ON signal.

F2.06	High-speed pulse output function selection	0～17	0	☆
F2.07	DA1 output function selection	0～17	0	☆
F2.08	DA2 output function selection	0～17	1	☆

High-speed pulse output frequency range of 0.01kHz ~ F2.09 (high speed pulse output maximum frequency), F2.09 can be set between 0.01kHz ~ 100.00kHz.

Analog Output DA1 and DA2 output range is 0V ~ 10V, or 0mA ~ 20mA. Pulse output or analog output range, with the corresponding scaling function relationship in the following table:

Setting value	functions	Description
0	Running frequency	0～Max. output frequency
1	Set frequency	0～Max. output frequency
2	Output current	0～2 times the motor rated current
4	Output power	0～2 times rated power
5	Output voltage	0～1.2 times inverter rated voltage
6	High speed pulse input	0.01kHz～100.00kHz
7	Anolog AI1	0V～10V
8	AnologAI2	0V～10V(or 0～20mA)
12	Coummunication set	0.0%～100.0%
13	Motor speed	0～Max. output frequency correspondent speed
14	Output current	0.0A~100.0A(Inverter power≦55kW); 0.0A~1000.0A(Inverter power>55kW)
15	DC bus voltage	0.0V～1000.0V
17	Frequency source main set	0～Max. output frequency

F2.09	Maximum frequency of high-speed pulse	0.01kHz～100.00kHz	50.00kHz	☆

When the SPB terminal as a pulse output, the function code is used to select the maximum output pulse frequency value.

F2.10	SPB output delay	0.0s～3600.0s	0.0s	☆
F2.11	Relay 1 output delay time	0.0s～3600.0s	0.0s	☆
F2.13	SPA output delay time	0.0s～3600.0s	0.0s	☆
F2.14	Relay 2 output delay time	0.0s～3600.0s	0.0s	☆

Set the output terminal SPA, SPB, relay 1, relay 2, delay time of changing from the state produced to the actual output differentiated.

F2.15	DO terminal active status selection	Units digit	SPB switching active status selection	00000	☆
		Positive	0		
		Negative	1		
		Tens digit	Relay 1 active setting (0 to 1, as defined in units digit)		
		Hundreds digit	Reserve		
		Thousands digit	SPA Terminal active state settings (0 to 1, as defined in units digit)		
		Tens thousand digit	Relay 2 active setting (0 to 1, as defined in units digit)		

Define the output terminal SPA, SPB, relay 1, relay 2 output logic.

0: positive, digital output terminal and the corresponding public terminal connectivity to the active state, disconnecting is inactive state;

1: negative, digital output terminal and the corresponding public terminal connectivity to the inactive state, disconnecting is active state.

5-1-5.F3 Group Start and stop control group

Code	Parameter name	Setting range		Factory setting	change
F3.00	Start-up mode	Direct startup	0	0	☆
		Speed tracking restart	1		
		Pre-excitation start (AC asynchronous motor)	2		
F3.03	Start frequency	0.00Hz～10.00Hz		0.00Hz	☆
F3.04	Hold time for start frequency	0.0s～100.0s		0.0s	★
F3.05	DC Pre-excitation current	0%～100%		0%	★
F3.06	DC Pre-excitation time	0.0s～100.0s		0.0s	★
DC brake, generally used to stop and start the motor running. Pre-excitation is used to enable the establishment of magnetic field induction motor and then start to improve the response speed. DC brake is valid only in start-up mode for the direct start. At this point the drive to start first by setting the DC braking current DC braking, DC braking time after the start and then start running. If the set DC braking time is 0, no start directly after DC braking. DC braking current increases, the greater the braking force. If the start-up mode for the asynchronous machine to start pre-excitation, the drive pre-press set excitation current pre-established field, after the set pre-magnetizing time before starting operation. If the set pre-magnetizing time is 0, no pre-excitation processes started directly. DC brake current / pre-excitation current, is the percentage of relative inverter rated current.					
F3.07	Stop mode	Deceleration stop	0	0	☆
		Free stop	1		
F3.08	DC start frequency	0.00Hz～F0.19(maximum-frequency)		0.00Hz	☆
F3.09	DC waiting time	0.0s～100.0s		0.0s	☆
F3.10	Stop braking current	0%～100%		0%	☆
F3.11	Stop braking current	0.0s～100.0s		0.0s	☆

5-1-6.F4 V/F control group

Code	Parameter name	Setting range		Factory setting	change
F4.00	V/F curve setting	Linear V/F	0	0	★
		Multi-point V/F	1		
		Square V/F	2		
		1.2th power V/F	3		
		1.4th power V/F	4		
		1.6th power V/F	6		
		1.8th power V/F	8		
		V/F completely separate	10		
		V/F half separate	11		
F4.01	Torque boost	0.0%: automatic torque boost 0.1% to 30.0%		4%	★
F4.02	Torque boost cut-off frequency	0.00Hz to F0.19 (maximum frequency)		15.00Hz	★
F4.09	V/F slip compensation gain	0.0 %～200.0%		0.0%	☆
This parameter is valid only for asynchronous motors. V/F slip compensation can compensate for the speed deviation of asynchronous motor when the load increases, so as to keep stable speed when the load changes. If V/F slip compensation gain is set to 100.0%, it means that the compensated deviation is equal to the rated motor slip under the rated motor load mode, while the rated motor slip can be calculated through b0 group of motor rated frequency and rated speed.					

When adjusting V/F slip compensation gain, generally it is based on the principle that the motor speed is same as the target speed. When the motor speed is different from target value, it is necessary to appropriately fine-tune the gain.				
F4.10	V/F overexcitation gain	0～200	64	☆
F4.11	V/F oscillation suppression gain	0～100	-	☆

5-1-7.F6 Keyboard and Display

Code	Parameter name	Setting range		Factory setting	change
F6.00	STOP/RESET key functions	STOP/RESET key is enabled only under keyboard operation mode	0	1	☆
		STOP/RESET key is enabled under any operation mode	1		
F6.01	Running status display parameters 1	0000 ～FFFF		001F	☆

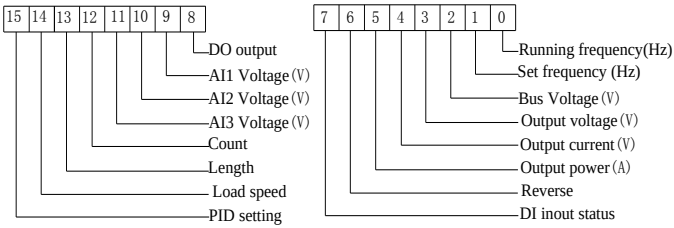

If the above parameters need to be displayed in operation, firstly set its position to 1, and then set at F6.01 after converting the binary number to the hexadecimal number.

For example,If the load speed need to be displayed in operation,the 14th in F6.01 should be setting to 1, if the AI voltage need to be displayed in operation, the 9th in F.6.01 should be setting to 1 . If all of the related position are setting to 1 per the requirement, the data are show as follow:

Tag number	15	14	13	12	11	10	9	8	7	6	5	4	3	2	1	0
Number	0	1	1	1	1	0	1	0	0	1	0	0	1	1	1	1

The data will devided to 4 group:

Tag number	15-12	11-8	7-4	3-0
Number	0111	1010	0100	1111

After check the comparison of the binary number and the hexadecimal number.the data is 0x7A4F.

F6.03	Stop status display parameters	0001～FFFF	0033	☆

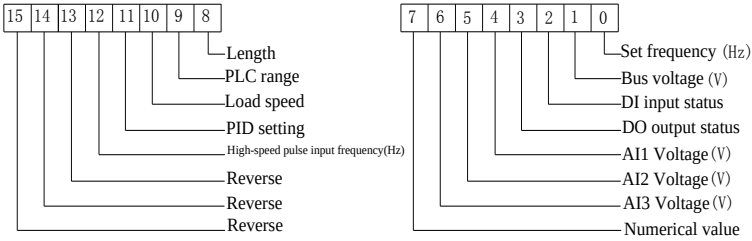

If the above parameters need to be displayed on operation, firstly set its position to 1, and then set at F6.03 after converting the binary number to the hexadecimal number.

F6.06	Inverter module radiator temperature	0.0℃～100.0℃	-	●
Display the inverter module IGBT temperature.The different models of the inverter module				

vary IGBT overtemperature protection values.				
F6.07	Total run time	0h～65535h	-	●
Display the total run time of inverter When the run time reaches the set time(F7.21), the inverter's multi-function digital output function (12) outputs ON signal.				
F6.08	Total power-on time	0h～65535h	-	●
Show the total time of inverter power-on, When the power-on time reaches the set time(F7.20), the inverter’s multi-function digital output function(24) outputs ON signal.。				
F6.10	Part number	Inverter product number	-	●
F6.11	Software version number	Control panel software version number	-	●
F6.13	Dormancy function	0:invalid；1:valid	0	☆
When dormancy function Settings (F6.13 = 1) are valid, E0.03 (wake delay time), E0.09 (dormancy frequency), and E0.11 (dormancy delay time) function are available.				
F6.15	Keyboard type selection	0:Small keyboard(Single row LED) 1:Large Keyboard(Double row LED)	0	●
F6.16	Monitor selection 2	1Kbit/100bit: parameter number 10bit/1bit: parameter series number	d0.02	☆
The parameter of motor selection2 can be showed in the bottom of double LED or LCD.				
F6.17	Power correction coefficient	0.00～10.00	1.00	●
Frequency converter with motor running, the display output power(d0.05)is different with the actual output power, through the parameters, adjust the converter display power and the actual output power corresponding relation.				
F6.20	Keyboard lock selection	RUN/STOP key is enabled: 0 STOP/RESET/ key and encoder is enabled: 1 RUN/STOP/UP/DOWN key is enabled: 2 STOP key is enabled: 3	0	☆
Pressing the PRG+ Encoder keys to achieve lock and unlock. When the keyboard belongs to the lock state, when the keyboard is locked, the digital display tube will show "A." in front, such as the keyboard on display 50, when the lock, press the keyboard "PGR" key, digital display "A.50.00.				
F6.21	QUICK key function selection	No function: 0 jog running: 1 shift key: 2 forward/Reverse running switching: 3 UP/DOWN setting remove: 4 Free stop: 5 commands switch orderly: 6	1	☆
1:Jog running: press QUICK key , the inverter will make jog running in the default direction. 2:Shift key : Choose displayed parameter circularly under running or stop interface 3:Forward/Reverse running switching: it can complete the request of forward/Reverse running, it is effective under the keyboard command. 4:UP/DOWN setting remove: to remove the settings of the UP/DOWM. 5:Free stop; operate the quick key to stop the inveter. 6:Switch and display the commands orderly by pressing QUICK key ,Keyboard setting--terminal setting-communications setting will switch orderly.				

5-1-8.F7 Group Auxiliary function

Code	Parameter name	Setting range	Factory setting	change
F7.00	Jog running frequency	0.00Hz～F0.19(maximum frequency)	2.00Hz	☆
F7.01	Jog acceleration time	0.0s～6500.0s	20.0s	☆

F7.02	Jog deceleration time	0.0s～6500.0s		20.0s	☆
F7.17	Reverse rotation control	Allow	0	0	☆
		Prohibit	1		
F7.22	Start protection	OFF	0	0	☆
		ON	1		

This parameter relates to the security features of the inverter

If this parameter is set to 1 , and if the running command is active (e.g. the terminal running command is closed before power-on) when the inverter is in power-on, the inverter will not respond to the running command, you must firstly cancel the running command, when the running command is active again, the inverter will respond. The parameter is set 1, you can prevent the danger caused by that the inverter unknowingly responds to the running command in the event of power-on and fault reset

If the parameter is set to 0, the inverter is in no fault state (for example, the terminal operation command is closed before power on), the inverter responds to the operation command

5-1-9.F8 Group-Fault and protection

Code	Parameter name	Setting range		Factory setting	change
F8.00	Overcurrent stall gain	0～100		20	☆
F8.01	Overcurrent stall protection current	100%～200%		150%	☆

In the process of the inverter accelerate or constant speed, when the output current exceeds the overcurrent stall protection current(F8.01),the inverter stop acceleration/deceleration process and remains in the current operating frequency,and then continues to ac/decelerate upon the decline of overcurrent stall protection current(F8.01).

Overcurrent stall gain is used for adjusting inhibition overcurrent capability during ac/deceleration.The greater this value, the stronger inhibition over current capability under the premise that the over current does not occur,the best is the smaller gain setting.

For the small inertia load, the overcurrent stall gain should be small, otherwise which cause the slower system dynamic response.For the big inertia load, the overcurrent stall gain should be large,otherwise the poor inhibitory effect may cause over current fault.

When the overcurrent stall gain is set to 0,the overcurrent stall function will be canceled.

F8.02	Motor overload protection	prohibit	0	1	☆
		allow	1		
F8.03	Motor overload protection gain	0.20～10.00		1.00	☆

F8.02=0: no motor overload protection function,there may be the risk of the demage to the motor due to overheating,it is recommend that the thermal is installed between the inverter and the motor;

F8.02=1: the inverter will determine whether the motor is overloaded or not according to the inverse time curve of the motor overload protection.Inverse time curve of motor overload protection:220% X (F8.03)X rated motor current,if this lasts for 1 second,the alarm of motor will be prompted overload fault;150%X(F8.03)X rated motor current,if this lasts for 30 seconds, the alarm of motor overload will be prompted.

User shall correctly set the value of F8.03 according to the Actual motor

Overload capacity,if the value is set to too large,which may easily lead to motor overheating and damage while the inverter will not alarm!

F8.04	Motor overload pre-alarm co-effcient	50%～100%	80%	☆

This function is used in the front of motor overload fault protection,and sends a pre-alarm signal to the control system by DO, the warning coefficient is used to determine the extent of pre-alarm prior to motor overload protection.The higher the value, the smaller the extent of pre-alarm in advance.

When the cumulative amount of inverter output current is greater than the products of the inverse time curve of overload and F8.04,the inverter multi-function digital DO will output “motor overload pre-alarm” on signal.

F8.05	Overvoltage stall gain	0(Stall without overpressure)～100		0	☆
F8.06	Stall protection voltage / energy dissipation braking voltage	120%～150%(Three-phase)		130%	☆

In the process of deceleration when the inverter, the DC bus voltage over voltage stall protection / braking voltage, inverter stop deceleration remain in the current operating frequency (F3.12 = 0, while the output signal by an external brake, braking resistor implement energy brake.) continue to slow down after the bus voltage drops.

The overvoltage stall gain is used to adjust the ability of the converter to suppress the overvoltage during the deceleration process. The greater the value, the better the ability to suppress the overpressure. The smaller the gain setting, the better the condition is that no overvoltage occurs.

For small inertia loads, the overvoltage stall gain should be small, otherwise the dynamic response of the system will be slower. For large inertia load, this value should be large, otherwise the suppression effect is not good, overvoltage fault may occur.

The overvoltage stall function is reversed when the overvoltage stall gain is set to 0.

F8.08	Out of phase protection	prohibit	0	1	☆
		allow	1		

Select whether the output phase is protected.

F8.09	Ground to ground short-circuit protection	invalid	0	1	☆
		effective	1		

Frequency converter can be selected to check whether the motor is shorted to ground.

If this function is valid, the converter U, V, and W will have voltage output for a period of time after power on.

F8.10	Auto reset times	0～32767	32767	☆

When the frequency converter chooses to reset the fault automatically, it is used to set the number of automatic reset. After more than this frequency, the converter remains in a state of failure.

When setting up the F8.10 automatic reset number larger than 1, the instantaneous power converter, and power converter, automatic operation.

When the fault is reset automatically and the normal operation time is more than 1 hours, the reset rate is reset.

F8.11	Fault DO action	No action	0	0	☆
		action	1		

If the inverter has set up the automatic reset function, the malfunction DO will be operated during the automatic reset, and can be set via the F8.10.

F8.12	Fault reset interval	0.1s～100.0s	1.0s	☆

The wait time between the self alarm of the frequency converter and the reset of the automatic fault.

F8.27	Instantaneous stop protection voltage	50%～100%		80%	☆
F8.29	Momentary judgement voltage	50.0%～100.0%(Standard bus voltage)		80%	☆
F8.30	Off load protection options	Invalid	0	0	☆
		Effective	1		
F8.31	Load test level	0.0%～100.0%(Rated current of motor)		10.0%	☆
F8.32	Load test time	0.0s～60.0s		1.0s	☆

If the off load protection function is valid, when the inverter output current is less than the load detection level F8.31, and the duration is greater than the load detection time F8.32, the output frequency of the inverter is automatically reduced to 7% of the rated frequency. During off load protection, the inverter automatically returns to the set frequency if the load is resumed.

5-1-10.Communication parameterF9.00

Code	Parameter name	Setting range		Factory setting	change
F9.00	Baud rate	Units digit	MODBUS	6005	☆
		300BPS	0		
		600BPS	1		
		1200BPS	2		
		2400BPS	3		
		4800BPS	4		
		9600BPS	5		
		19200BPS	6		
		38400BPS	7		
		57600BPS	8		
		115200BPS	9		
		Tens digit	Profibus-DP		
		115200BPS	0		
		208300BPS	1		
		256000BPS	2		
		512000BPS	3		
		Hundreds digit	Reserved		
		Thousands digit	CAN bus baudrate		
		20	0		
		50	1		
		100	2		
		125	3		
		250	4		
		500	5		
		1M	6		
This parameter is used to set the data transfer rate between the host computer and the inverter. Note that the baud rate set by the host computer and the inverter must be the same, otherwise communication can not be working . The higher the baud rate, the faster the communication speed.					
F9.01	Data format	No parity (8-N-2)	0	0	☆
		Even parity (8-E-1)	1		
		Odd parity (8-O-1)	2		
		No parity (8-N-1)	3		
The data format set by the host computer and the inverter must be the same. Otherwise, the communication can not be carried out					
F9.02	This unit address	1~250，0 for broadcast address		1	☆
When the local address is set to 0, that means broadcast address,it can achievethe host computer broadcast function. The local address is unique (except for the broadcast address), which is the basic to achieve point to point communication between the host computer and inverter .					
F9.03	Response delay	0ms-20ms		2ms	☆
Response delay: It is the interval between the end of the inverter data reception and the transmission of data to the host computer.If the response delay is less than the system processing time, the response delay is based on the system processing time. If the response delay is longer than the system processing time, the system will delay the waiting time and send data to the host computer until the response delay time is reached.					
F9.04	Communication timeout time	0.0 (invalid), 0.1s-60.0s		0.0	☆
When the function code is set to 0.0s, the communication timeout parameter is invalid.When the function code is set to a valid value, if the interval between the next communication exceeds the communication timeout time, the system will show a communication error (fault number Err.16).Normally, it is set to invalid.If you set the secondary parameter in a continuous communication system, you can monitor the communication status					

F9.05	Data transfer format selection	Units igit	MODBUS	30	☆
		Non-standard MODBUS protocol	0		
		Standard MODBUS protocol	1		
		Tens digit	Profibus		
		PPO1 format	0		
		PPO2 format	1		
		PPO3 format	2		
		PPO5 format	3		
F9.05 = 1: Select the standard Modbus protocol，F9.05 = 0: When reading a command, the slave returns more bytes than the standard Modbus protocol.					
F9.06	Communication read current resolution	0.01A	0	0	☆
		0.1A	1		
Used to determine the output current value when the communication reads the output current.					
F9.07	Communication card type	Modbus communication card	0	0	☆
		Profibus communication card	1		
		Reserved	2		

5-1-11.FB Control optimization parameters

Code	Parameter name	Setting range		Factory setting	change
Fb.00	Fast current limiting manner	Disable	0	1	☆
		Enable	1		
Enable Quick Current Limiting function, which can minimize the overcurrent fault of inverter , and ensure the uninterrupted operation of inverter. If the drive is in the state of fast current limiting for a long period of time , the inverter may be damaged by overheating and others, this case is not allowed, so the inverter will alarm fault with fault ID Err.40, it indicates that the inverter exists overload and needs to be shut down.					
Fb.01	Undervoltage point setting	50.0%~140.0%		100.0%	☆
Used to set the voltage value of inverter undervoltage fault with fault ID Err.09 , the different voltage levels of inverter 100.0% corresponds to the different voltage points are as follows: Single-phase 220V or three-phase 220V: 200V three-phase 380V: 350V.					
Fb.02	Overvoltage point setting	200.0V~2500.0V		-	★
Single-phase 220V or three-phase 220V: 200V three-phase 380V: 350V.					
Fb.03	Deadband compensation mode selection	No compensation	0	1	☆
		Compensation mode 1	1		
		Compensation mode 2	2		
Fb.04	Current detection compensation	0~100		5	☆

5-1-12.E0 Solar water pump special group PI9000-S

Code	Parameter name	Setting range		Factory setting	change
E0.00	Solar operation mode selection	Control mode invalid	0	2	☆
		CVT Mode	1		
		MPPT Mode	2		
0: PV invalid Photovoltaic effect does not work; when normal operation model, need to set E0.00=0. 1: CVT mode Bus voltage is constant as a given value, F0.03 is set to 8, photovoltaic mode, bus voltageis given as E0.01, feedback the current bus voltage. 2: MPPT mode Bus voltage is given as the maximum power search result, F0.03 is set to 8, photovoltaicmode. When starting but before the searching, the bus voltage is given as E0.01, atintervals after the search, the search result is as given value					

E0.01	Solar voltage setting	0.0～1000.0V	Confirmed model type	☆

When set E0.00 to 1, this voltage is CVT mode bus voltage set value;
When set E0.00 to 2, the voltage is the bus voltage given value when MPPT mode be started, and also the initial value when search voltage.
Appropriate adjustments according to the site conditions.
Note: the set value should be lower than the bus voltage value, if the value is higher than thebus voltage, the inverter may run at around 0Hz during starting.

Voltage	Voltage setting default value(V)
220V	310
380V	540

E0.02	MPPT Voltage search interval time	0.0～1000.0s	2.0s	☆

MPPT Interval search time when set E0.00 to 2. It indicates the speed of MPPT tracking ,lower numbers equate to better speed on MPPT tracking， but the MPPT serching interval is short,may result in more fluctuations on output frequency of the inverter

E0.03	Wake up delay time	0～10000s	300s	☆

When using the sleep function, set F6.13 = 1 (valid).
During the operation of the inverter, when the running frequency is less than E0.09 sleep frequency, after the E0.11 sleep delay time, the inverter enters the sleep state and decelerates to stop.
If the frequency inverter dormant, run command valid, after E0.03 awakens the delay time, frequency converter to start.

E0.04	MPPT Voltage search interval time	0.0～1000.0V	Confirmed model type	☆

MPPT maximum voltage in the process of search value.

Voltage	Search lower limit of voltage default(V)
220V	400
380V	650

E0.05	Lower limit of MPPT search voltage	0.0～1000.0V	Confirmed model type	☆

Search value of lower limit voltage in MPPT search process.

Voltage	Search lower limit of voltage default(V)
220V	270
380V	480

E0.06	PID Maximum voltage deviation value	0.0～1000.0V	20.0V	☆

When Photovoltaic mode works, by changing parameters, can limit given bus voltage and current bus voltage’s PID maximum input voltage deviation value

E0.07	Solar wake voltage	0.0～1000.0V	Confirmed model type	☆

When inverter into hibernation, if the bus voltage gradually higher than the set voltage(E0.07), the inverter will start automatically.

Voltage	Wake-up voltage default Value(V)
220V	300
380V	530

E0.08	Solar hibernation voltage	0.0～1000.0V	Confirmed model type	☆

When inverter is running, when the bus voltage is lower than the set voltage (E0.08),inverter will go into hibernation.

Voltage	Hibernation voltage default Value(V)
220V	200

	380V	400		
E0.09	Hibernation frequency	0～Max frequency(F0.19)	15.00Hz	☆
Hibernation frequency (E0.09) Used with wake-up delay time (E0.03) and hibernation delay time (E0.11), pls check E0.03 for Functional description				
E0.10	Load drop detection interval time	0～65535s	6000s	☆
When using the load detection interval, set F8.30 ~ F8.32. After the inverter falls off, Restart the operation after the time which set by E 0.10.				
E0.11	Hibernation delay time	0～10000s	100	☆
Hibernation delay time(E0.11)Used with wake-up delay time (E0.03) and hibernation frequency (E0.09), pls check E0.03 for Functional description				

5-1-13.E2 PID function parameter.

Code	Parameter name	Setting range	Factory setting	change
E2.00	PIDsetting source	0～6	0	☆
E2.01	PIDkeyboard reference	0.0%～100.0%	50.0%	☆
E2.02	PIDfeedback source	0～8	0	☆
E2.03	PIDaction direction	0:Positive；1:negative	0	☆
E2.04	PIDreference feedback range	0～65535	1000	☆
E2.05	PIDinversion cutoff frequency	0．00～F0.19(maximum frequency)	2.00Hz	☆
E2.06	PIDdeviation limit	0.0%～100.0%	0.0%	☆
When the deviation between PID reference value and PID feedback value is less than E2.06, PID will stop regulating action. Thus, when the deviation is lesser, the output frequency will be stable, it is especially effective for some closed-loop control occasions.				
E2.07	PID differential limiting	0.00% to 100.00%	0.10%	☆
The role of the differential is more sensitive in PID regulator, is likely to cause system oscillation, generally the role is limited to a smaller range, E2.07 is used to set PID differential output range.				
E2.08	PID reference change time	0.00s to 650.00s	0.00s	☆
The PID reference change time means the required time that PID reference value changes from 0.0% to 100.0%.When the PID reference changes, the PID reference value will change linearly according to the reference change time to reduce the adverse effects to the system caused by a sudden reference change.				
E2.09	PID feedback filter time	0.00s to 60.00s	0.00s	☆
E2.10	PID output filter time	0.00s to 60.00s	0.00s	☆
E2.09 is used for filtering the PID feedback quantity, the filter helps reduce the influence of interference to the feedback quantity, but will bring the response performance of the process closed loop system. E2.10 is used for filtering the PID output frequency, the filter will weaken the sudden change of the inverter output frequency, but it will also bring the response performance of the process closed loop system.				
E2.11	PID feedback loss detection value	0.0%: not judged feedback loss 0.1% to 100.0%	0.0%	☆
E2.12	PID feedback loss detection time	0.0s to 20.0s	0.0s	☆
This function code is used to determine whether the PID feedback is lost or not. When the PID feedback is less than the PID feedback loss detection value(E2.11), and the duration is longer than the PID feedback loss detection time(E2.12), the inverter will alarm fault ID Err.31, and troubleshoot according to the selected method.				
E2.13	Proportional gain KP1	0.0 to 200.0	80.0	☆
E2.14	Integration time Ti1	0.01s to 10.00s	0.50s	☆
E2.15	Differential time Td1	0.00s to 10.000s	0.000s	☆
Proportional gain KP1:Used to decide the extent of the PID regulator, the greater KP1, the				

greater adjusting extent. This parameter 100.0 means that when the deviation of PID feedback value and reference value is 100.0%, the PID regulator will adjust the output frequency command to the maximum frequency.

Integration time Ti1: used to decide the extent of integral adjustment of the PID regulator. The shorter integration time, the greater extent of integral adjustment The integration time means that when the deviation of PID feedback value and reference value is 100.0%, the integration regulator will successively adjust to the maximum frequency for the time.

Differential time Td1: used to decide the extent that the PID regulator adjusts the deviation change rate. The longer differential time, the greater extent of adjustment The differential time means that the feedback value changes 100.0% within the time, the differential regulator will adjust to the maximum frequency.

E2.16	Proportional gain KP2	0.0 to 200.0		20.0	☆
E2.17	Integration time Ti2	0.01s to 10.00s		2.00s	☆
E2.18	Differential time Td2	0.00s to 10.000s		0.000s	☆
E2.19	PID parameter switching conditions PID parameter switching deviation 1	no switching	0	0	☆
		switching via terminals	1		
		automatically switching according to deviation.	2		
E2.20	Proportional gain KP2	0.0% to E2.21		20.0%	☆
E2.21	Integration time Ti2	E2.20 to 100.0%		80.0%	☆

In some applications, only one group of PID parameters can not meet the needs of the entire run, it is required to use different PID parameters under different conditions.

This group of function codes is used to switch between two groups of PID parameters. Which the setting method for regulator parameter(E2.16 to E2.18) is similar to the parameter(E2.13～E2.15).The two groups of PID parameters can be switched by the multi-functional digital DI terminal, can also be switched automatically according to the PID deviation.If you select the multi-functional DI terminal, the multi-function terminal function selection shall be set to 43 (PID parameter switching terminal), select parameter group 1 (E2.13 E2.15) when the terminal is inactive, otherwise select parameter group 2 (E2.16 to E2.18).

If you select the automatic switch mode, and when the absolute value of deviation between reference and feedback parameters is less than PID parameter switching deviation 1(E2.20), select parameter group 1 for PID parameter. When the absolute value of deviation between reference and feedback parameters is more than PID parameter switching deviation 2(E2.21), select parameter group 2 for PID parameter. If the deviation between reference and feedback parameters is between switching deviation 1 and switching deviation 2, PID parameter is the linear interpolation of the two groups of PID parameters

E2.22	PID integral properties	Units digit	integral separation	00	☆
		Invalid	0		
		Valid	1		
		Tens digit	whether stop integration when output reaches limit		
		continue	0		
		stop integral	1		

Integral separation:If the integral separation is set to active, when the integral pause of multifunction digital DI(function 38) is active, PID integral will stop operations, at the time only the proportional and derivative actions of PID is active.If the integral separation is set to inactive, however the multifunction digital DI is active or inactive, the integral separation will be inactive. Whether stop integration when output reaches limit: you can select whether or not to stop the integral action after PID operation output reaches the maximum or the minimum value.If you select to stop the integral action, the PID integral will stop the calculation, which may help to reduce the overshoot of PID.

E2.23	PID initial value	0.0%~100.0%(Max frequency)	0.0%	☆
E2.24	PID initial value hold time	0.00s~360.00s	0.00s	☆

When the inverter starts, PID output is fixed at PID initial value(E2.23), and then continuous

for the PID initial value hold time(E2.24), at last PID begins operation of the closed-loop adjustment.

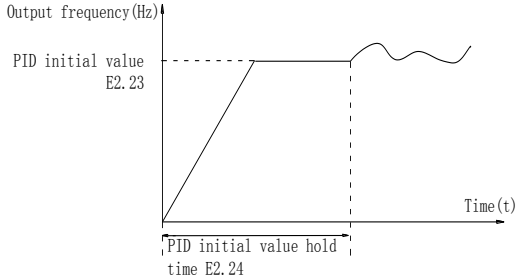

Diagram 5-1:functional schematic of PID initial value.

E2.25	Maximum deviation of twice outputs(forward)	0.00% to 100.00%	1.00%	☆
E2.26	Maximum deviation of twice outputs(backward)	0.00% to 100.00%	1.00%	☆

This function is used to limit the deviation between two PID output beats(2ms/beats), in order to suppress the too fast changes of PID output so that stabilizing the inverter operation.

E2.25 and E2.26 respectively corresponds to the maximum of the absolute value of output deviation when rotating forward and reverse.

5-1-14..E3 virtual terminal group

Code	Parameter name	Setting range	Factory setting	change
E3.00	Virtual VDI1 terminal function selection	0 to 50	0	★
E3.01	Virtual VDI2 terminal function selection	0 to 50	0	★
E3.02	Virtual VDI3 terminal function selection	0 to 50	0	★
E3.03	Virtual VDI4 terminal function selection	0 to 50	0	★
E3.04	Virtual VDI5 terminal function selection	0 to 50	0	★

Virtual VDI1 ~ VDI5 on the function, are exactly as same as the DI on the control panel, can be used as a multi-function digital quantity input, the details please refer to the F1.00 ~ F1.09 is introduced.

E3.05	Virtual VDI effective status set mode	Units digit	Virtual VDI1	00000	★
		Invalid	0		
		Valid	1		
		Tens digit	Virtual VDI2 (0-1, same as unit digit)		
		Hundreds digit	Virtual VDI3 (0-1, same as unit digit)		
		Thousands digit	Virtual VDI4 (0-1, same as unit digit)		
		Ten thousands digit	Virtual VDI5 (0-1, same as unit digit)		
E3.06	Virtual VDI status set	Units digit	Virtual VDI1	11111	★
		VD1 whether valid is decided by Virtual VDOX status	0		
		VD1 whether valid is decided by Virtual VDOX status	1		
		Tens digit	Virtual VDI2 (0-1, same as unit digit)		
		Hundreds digit	Virtual VDI3 (0-1, same as unit digit)		
		Thousands digit	Virtual VDI4 (0-1, same as unit digit)		
		Ten thousands digit	Virtual VDI5 (0-1, same as unit digit)		

Different from ordinary digital quantity input terminals, virtual VDI state can have two setting modes which is selected by E3.06.

When selecting VDI state is determined by the state of the corresponding virtual VDO, VDI is valid or invalid state depending on the VDO output valid or invalid, and VDIx only binding VDOx(x=1~5).

When choosing VDI state selection function code to set, through the binary bits of E3.05,

respectively determine the state of virtual input terminals.

Example of how to use VDI.

Example 1. Implement following function: “Inverter fault alarm and shuts down when AI1 input exceeds upper or lower frequency” .

Realize by following settings: Set VDI state decided by VDO, set VDI1 function as “ user defined fault 1” (E3.00=44); set VDI1 terminal state effective mode decided by VDO1 (E3.06=xxx0); set VDO1 output function as “AI1 input exceeds upper & lower frequency” (E3.11=31); so when AI1 input exceeds upper or lower frequency, VDO1 state is ON, VDI1 input terminal state is effective, VDI1 receive user defined fault 1, inverter then alarm fault no. 27 and shuts down.

Example 2. Implement following function: “Inverter run automatically after power-on”.

Realize by following settings: set VDI state decided by function code E3.05, set VDI1 function as “FORWARD” (E3.00=1); set VDI1 terminal state effective decided by function code (E3.06=xxx1); set VDI1 terminal state is effective (E3.05=xxx1); set command source as “terminal control” (F0.11=1); set protection selection as “no protection” (F7.22=0); so after inverter powered on and initialization complete, VDI1 detected effective, and it match forward running, then inverter starts running forwardly.

E3.07	AI1 terminal as a function selection of DI	0 to 50		0	★
E3.08	AI2 terminal as a function selection of DI	0 to 50		0	★
E3.09	reserve				
E3.10	AI terminal as a function selection of DI	Units digit	AI1	000	★
		High level effectively	0		
		High level effectively	1		
		Tens digit	AI2(same as units digit)		
		Hundreds digit	AI3(same as units digit)		

This group function code is used when using AI as DI, when AI used as DI, and input voltage of AI is greater than 7V, AI terminal status will be high level, when input voltage of AI is lower than 3V, AI terminal status will be low level. For between 3V~ 7V hysteresis E3.10 is to determine that when the AI is used as DI, AI is made valid by means of the high level state, or the low level of valid states. As for AI as DI feature set, same as the ordinary DI Settings, please refer to the F1 group setting instructions related DI. Below figure is AI input voltage taken as an example, explains the relationship between input voltage of AI and the corresponding state of DI.

E3.11	VDO1 output function	With the physical internal sub DIx	0	0	☆
		See F2 group physical DO output option	1 to 40		
E3.12	VDO2 output function	With the physical internal sub DIx	0	0	☆
		See F2 group physical DO output option	1 to 40		
E3.13	VDO3 output function	With the physical internal sub DIx	0	0	☆
		See F2 group physical DO output option	1 to 40		
E3.14	VDO4 output function	With the physical internal sub DIx	0	0	☆
		See F2 group physical DO output option	1 to 40		
E3.15	VDO5 output function	With the physical internal sub DIx	0	0	☆
		See F2 group physical DO output option	1 to 40		
E3.16	VDO output effective status	Units digit	VDO1	00000	☆
		Positive logic	0		
		Negative logic	1		
		Tens digit	VDO2(0 to 1，same as above)		
		Hundreds digit	VDO3(0 to 1，same as above)		
		Thousands digit	VDO4(0 to 1，same as above)		
		Ten thousands digit	VDO5(0 to 1，same as above)		

E3.17	VDO1 output delay time	0.0s to 3600.0s	0.0s	☆
E3.18	VDO2 output delay time	0.0s to 3600.0s	0.0s	☆
E3.19	VDO3 output delay time	0.0s to 3600.0s	0.0s	☆
E3.20	VDO4 output delay time	0.0s to 3600.0s	0.0s	☆
E3.21	VDO5 output delay time	0.0s to 3600.0s	0.0s	☆

5-1-15.b0 motor parameter group

Code	Parameter name	Setting range		Factory setting	change
b0.00	Motor type selection	General asynchronous motor	0	0	★
		Asynchronous inverter motor	1		
		Retain	2		
b0.01	Rated power	0.1kW to 1000.0kW		-	★
b0.02	Rated voltage	1V to 2000V		-	★
b0.03	Rated current	0.01A to 655.35A		-	★
b0.04	Rated frequency	0.01Hz to F0.19(maximum frequency)		-	★
b0.05	Rated speed	1rpm to 36000rpm		-	★

Above b0.00 to b0.05 are the motor nameplate parameters, which affects the accuracy of the measured parameters. Please set up according to the motor nameplate parameters. The excellent vector control performance needs the accurate motor parameters. The accurate identification of parameters is derived from the correct setting of rated motor parameters.

In order to guarantee the control performance, please configure your motor according to the inverter standards, the motor rated current is limited to between 30% to 100% of the inverter rated current. The motor rated current can be set, but can not exceed the inverter rated current. This parameter can be used to determine the inverter's overload protection capacity and energy efficiency for the motor.

It is used for the prevention of overheating caused by the self-cooled motor at low speed , or to correct for protecting the motor when the little change of the motor characteristics may affect the changes of the motor capacity.

b0.06	Asynchronous motor stator resistance	0.001Ω～65.535Ω	-	★
b0.07	Asynchronous motor rotor resistance	0.001Ω～65.535Ω	-	★
b0.08	Asynchronous motor leakage inductance	0.01mH～655.35mH	-	★
b0.09	Asynchronous motor mutUal inductance	0.01mH～655.35mH	-	★
b0.10	Asynchronous motor no-load current	0.01A～b0.03	-	★

b0.06 to b0.10 are the asynchronous motor parameters, and generally these parameters will not appear on the motor nameplate and can be obtained by the inverter auto tuning. Among which, only three parameters of b0.06 to b0.08 can be obtained by Asynchronous Motor Parameters Still Auto tuning; however, not only all five parameters but also encoder phase sequence and current loop PI parameters can be obtained by Asynchronous Motor Parameters Comprehensive Auto tuning

When modifying the motor's rated power (b0.01) or rated voltage (b0.02), the inverter will automatically calculate and modify the parameter values of b0.06 to b0.10 , and restore these 5 parameters to the motor parameters of commonly used standard Y Series.

If the asynchronous motor parameters auto tuning can not be achieved on-site, you can enter the corresponding above parameters according to the parameters provided by the manufacturer.

b0.27	Motor parameter auto tuning	No operation	0	0	★
		Asynchronous motor parameters still auto tuning	1		
		Asynchronous motor parameters comprehensive auto tuning	2		

If the motor is able to disengage the load, in order to obtain a better operating performance, you can choose comprehensive auto tuning; otherwise, you can only select parameters still auto tuning. Firstly set the parameter according to load condition, and then press RUN key, the inverter will perform parameters auto tuning. Parameters auto tuning can be performed only under

keyboard operation mode, is not suitable for terminal operation mode and communication operation mode.

0: no operation, which prohibits parameters auto tnning.

1: asynchronous motor parameters still auto tuning

Motor type and motor nameplate parameters b0.00 to b0.05 must be set correctly before performing asynchronous motor parameters still auto tuning. The inverter can obtain b0.06 to b0.08 three parameters before performing asynchronous motor parameters still auto tuning.

2: asynchronous motor parameters comprehensive auto tuning

During asynchronous motor parameters comprehensive auto tuning, the inverter firstly performs parameters still auto tuning, and then accelerates up to 80% of the rated motor frequency according to the acceleration time F0.13, after a period of time, and then decelerates till stop according to the deceleration time F0.14 to end auto tuning.

Before preforming asynchronous motor parameters comprehensive auto tuning, not only motor type and motor nameplate parameters b0.00 to b0.05 must be set properly, but also encoder type and encoder pulses b0.29, b0.28.

For asynchronous motor parameters comprehensive auto tuning, the inverter can obtain b0.06 to b0.10 five motor parameters, as well as the AB phase sequence b0.31 of encoder, vector control current loop PI parameters F5.12 to F5.15.

5-1-16.y0 Function code management

Code	Parameter name	Setting range		Factory setting	change
y0.00	Parameter initialization	No operation	0	0	★
		Restore the factory parameters, not including motor parameters	1		
		Clear history	2		
		Restore default parameter values, including motor parameters	3		
		Backup current user parameters	4		
		Restore user backup parameters	501		
		Clear keyboard storage area	10		
		upload parameter to keyboard storage area 1	11		
		upload parameter to keyboard storage area 2	12		
		download the parameters from keyboard storage 1 area to the storage system	21		
		download the parameters from keyboard storage 2 area to the storage system	22		

1: restore the factory setting, not including motor parameters:after y0.00 is set to 1, most of the inverter function parameters are restored to the factory default parameters, but motor parameters, frequency command decimal point (F0.02), fault recording information, cumulative running time , cumulative power-on time and cumulative power consumption will not be restored.

2: clear history:to clear the history of the inverter's fault recording information, cumulative running time , cumulative power-on time and cumulative power consumption.

3: restore default parameter values including motor parameters.

4: backup current user parameters:backup the parameters set by the current user. Backup all function parameters. It is easy to restore the default settings when user incorrectly adjust parameters.

501Restore user backup parameters:Restore previous backup user parameters.

10:Clear keyboard storage area:Empty keyboard storage area 1 and keyboard storage area 2

11: upload parameter to keyboard storage area 1:Upload the parameters of the inverter to keyboard storage area 1.

12: upload parameter to keyboard storage area 2:Upload the parameters of the inverter to the keyboard storage area 2.

21: download the parameters from keyboard storage 1 area to the storage system:Download

the parameters from keyboard storage 1 to inverter
22:download the parameters from keyboard storage 2 area to the storage system:Download the parameters from keyboard storage 2 to inverter

5-1-17.y1 Fault query:

Code	Parameter name	Setting range	Factory setting	change
y1.00	Type of the first fault	0 to 51	-	●
y1.01	Type of the second fault	0 to 51	-	●
y1.02	Type of the third(at last) fault	0 to 51	-	●

Record the type of the last three faults of inverter, 0 for no fault. Please refer to the related instructions for the possible causes and solutions for each fault code.

Failure type table:

No.	Failure type	No.	Failure type
0	No fault	18	Current detection abnormal
1	Inverter unit protection	19	Motor Auto tuning abnormal
2	Acceleration overcurrent	21	Parameter read and write abnormal
3	Deceleration overcurrent	22	Inverter hardware abnormal
4	Constant speed overcurrent	23	Motor short to ground
5	Acceleration overvoltage	26	Running time arrival
6	Deceleration overvoltage	27	Custom fault 1
7	Constant speed overvoltage	28	Custom fault 2
8	Control power failure	29	Power-on time arrival
9	Undervoltage	30	Off load
10	Inverter overload	31	PID feedback loss when running
11	Motor Overload	40	Fast current limiting timeout
12	Input phase loss	41	Switch motor when running
13	Output phase loss	42	Reserve
14	Module overheating	43	Motor over-speed
15	External fault	45	Motor overtemperature
16	Communication abnormal	51	Initial position error
17	Contactor abnormal		

y1.03	Frequency of the third fault	Frequency of the last fault	●
y1.04	Current of the third fault	Current of the last fault	●
y1.05	Bus voltage of the third fault	Bus voltage of the last fault	●
y1.06	Input terminal status of the third fault	Input terminal status of the last fault, the order is: BIT9 BIT8 BIT7 BIT6 BIT5 BIT4 BIT3 BIT2 BIT1 BIT0 DI0 DI9 DI8 DI7 DI6 DI5 DI4 DI3 DI2 DI1 When the input terminal is ON, the corresponding binary bits is 1, OFF is 0, all DI status is converted to the decimal number for display.	●
y1.07	Output terminal status of the third fault	Output terminal status of the last fault, the order is: BIT4 BIT3 BIT2 BIT1 BIT0 REL2 SPA Reserve REL1 SPB When the output terminal is ON, the corresponding binary bits is 1, OFF is 0, all DI status is converted to the decimal number for display.	●
y1.08	Reserved		
y1.09	Power-on time of the third fault	Current power-on time of the last fault	●

y1.10	Running time of the third fault	Current running time of the last fault	●
y1.11 to y1.12	Reserve		
y1.13	Frequency of the second fault	Frequency of the last fault	●
y1.14	Current of the second fault	Current of the last fault	●
y1.15	Bus voltage of the second fault	Bus voltage of the last fault	●
y1.16	Input terminal status of the second fault	Input terminal status of the last fault, the order is: BIT9 BIT8 BIT7 BIT6 BIT5 BIT4 BIT3 BIT2 BIT1 BIT0 DI0 DI9 DI8 DI7 DI6 DI5 DI4 DI3 DI2 DI1 When the input terminal is ON, the corresponding binary bits is 1, OFF is 0, all DI status is converted to the decimal number for display.	●
y1.17	Output terminal status of the second fault	Output terminal status of the last fault, the order is: BIT4 BIT3 BIT2 BIT1 BIT0 REL2 SPA Reserve REL1 SPB When the output terminal is ON, the corresponding binary bits is 1, OFF is 0, all DI status is converted to the decimal number for display.	●
y1.18	Reserved		
y1.19	Power-on time of the second fault	Current power-on time of the last fault	●
y1.20	Running time of the second fault	Current running time of the last fault	●
y1.11 to y1.12	Reserve		
y1.23	Frequency of the first fault	Frequency of the last fault	●
y1.24	Current of the first fault	Current of the last fault	●
y1.25	Bus voltage of the first fault	Bus voltage of the last fault	●
y1.26	Input terminal status of the first fault	Input terminal status of the last fault, the order is: BIT9 BIT8 BIT7 BIT6 BIT5 BIT4 BIT3 BIT2 BIT1 BIT0 DI0 DI9 DI8 DI7 DI6 DI5 DI4 DI3 DI2 DI1 When the input terminal is ON, the corresponding binary bits is 1, OFF is 0, all DI status is converted to the decimal number for display.	●
y1.27	Output terminal status of the first fault	Output terminal status of the last fault, the order is: BIT4 BIT3 BIT2 BIT1 BIT0 REL2 SPA Reserve REL1 SPB When the output terminal is ON, the corresponding binary bits is 1, OFF is 0, all DI status is converted to the decimal number for display.	●
y1.28	Reserved		
y1.29	Power-on time of the first fault	Current power-on time of the last fault	●
y1.30	Running time of the first fault	Current running time of the last fault	●

Chapter 6 Troubleshooting

6-1.Fault alarm and countermeasures

PI500-S can provide effective protection when the equipment performance is played fully. In case of abnormal fault, the protection function will be invoked, the inverter will stop output, and the faulty relay contact of the inverter will start, and the fault code will be displayed on the display panel of the inverter. Before consulting the service department, user can perform self-check , analyze the fault cause and find out the solution according to the instructions of this chapter. If the fault is caused by the reasons as described in the dotted frame, please consult the agents of inverter or directly contact with our company.

No.	Fault ID	Failure type	Possible causes	Solutions
1	Err.01	Inverter unit protection	1.the short circuit of inverter output happens 2.the wiring for the motor and the inverter is too long 3.module overheating 4.the internal wiring of inverter is loose 5.the main control panel is abnormal 6.the drive panel is abnormal. 7.the inverter module is abnormal	1.eliminate peripheral faults 2.additionally install the reactor or the output filter 3.check the air duct is blocked or not and the fan is working normally or not, and eliminate problems 4.correctly plug all cables 5.seek for technical support
2	Err.02	Acceleration overcurrent	1.the acceleration time is too short 2.manual torque boost or V/F curve is not suitable 3.the voltage is low 4.the short-circuit or earthing of inverter output happens 5.the control mode is vector and without identification of parameters 6.the motor that is rotating is started unexpectedly. 7.suddenly increase the load in the process of acceleration. 8.the type selection of inverter is small	1.increase acceleration time 2.adjust manual torque boost or V/F curve 3.set the voltage to the normal range 4.eliminate peripheral faults 5.perform identification for the motor parameters 6.select Speed Tracking Start or restart after stopping the motor. 7.cancel the sudden load 8.choose the inverter with large power level
3	Err.03	Deceleration overcurrent	1.the short-circuit or earthing of inverter output happens 2.the control mode is vector and without identification of parameters 3.the deceleration time is too short 4.the voltage is low 5.suddenly increase the load in the process of deceleration. 6.didn't install braking unit and braking resistor	1.eliminate peripheral faults 2.perform identification for the motor parameters 3.increase the deceleration time 4.set the voltage to the normal range 5.cancel the sudden load 6.install braking unit and brake resistor

4	Err.04	Constant speed overcurrent	1.the short-circuit or earthing of inverter output happens 2.the control mode is vector and without identification of parameters 3.the voltage is low 4, whether suddenly increase the load when running 5.the type selection of inverter is small	1.eliminate peripheral faults 2.perform identification for the motor parameters 3.set the voltage to the normal range 4.cancel the sudden load 5.choose the inverter with large power level
5	Err.05	Acceleration overvoltage	1.didn't install braking unit and braking resistor 2.the input voltage is high 3.there is external force to drag the motor to run when accelerating. 4.the acceleration time is too short	1.install braking unit and brake resistor 2.set the voltage to the normal range 3.cancel the external force or install braking resistor. 4.increase acceleration time
6	Err.06	Deceleration overvoltage	1.the input voltage is high 2.there is external force to drag the motor to run when decelerating. 3.the deceleration time is too short 4.didn't install braking unit and braking resistor	1.set the voltage to the normal range 2.cancel the external force or install braking resistor. 3.increase the deceleration time 4.install braking unit and brake resistor
7	Err.07	Constant speed overvoltage	1.there is external force to drag the motor to run when running 2.the input voltage is high	1.cancel the external force or install braking resistor. 2.set the voltage to the normal range
8	Err.08	Control power failure	The range of input voltage is not within the specification	Adjust the voltage to the range of the requirements of specification
9	Err.09	Under voltage fault	1.the momentary power cut 2.the inverter's input voltage is not within the specification 3.the bus voltage is not normal 4.the rectifier bridge and buffer resistance are abnormal 5.the drive panel is abnormal. 6.the control panel is abnormal	1.reset fault 2.adjust the voltage to the normal range 3.seek for technical support
10	Err.10	Inverter overload	1.the type selection of inverter is small 2.whether the load is too large or the motor stall occurs	1.choose the inverter with large power level 2.reduce the load and check the motor and its mechanical conditions
11	Err.11	Motor Overload	1. power grid voltage is too low 2.whether the setting motor protection parameters (F8.03) is appropriate or not 3.whether the load is too large or the motor stall occurs	1.check the power grid voltage 2.correctly set this parameter. 3.reduce the load and check the motor and its mechanical conditions
12	Err.12	Input phase loss	1.the drive panel is abnormal. 2.the lightning protection plate	1.replace the drive, the power board or contactor

			is abnormal 3.the main control panel is abnormal 4.the three-phase input power is not normal	2.seek for technical support 3.check and eliminate the existing problems in the peripheral line
13	Err.13	Output phase loss	1.the lead wires from the inverter to the motor is not normal 2.the inverter's three phase output is unbalanced when the motor is running 3.the drive panel is abnormal. 4.the module is abnormal	1.eliminate peripheral faults 2.check the motor's three-phase winding is normal or not and eliminate faults 3.seek for technical support
14	Err.14	Module overheating	1.the air duct is blocked 2.the fan is damaged 3.the ambient temperature is too high 4.the module thermistor is damaged 5.the inverter module is damaged	1.clean up the air duct 2.replace the fan 3.decrease the ambient temperature 4.replace the thermistor 5.replace the inverter module
15	Err.15	External equipment fault	Input external fault signal through the multi-function terminal DI	Reset run
16	Err.16	Communication fault	1.the communication cable is not normal 2.the settings for communication expansion card F9.07 are incorrect 3.the settings for communication parameters F9 group are incorrect 4.the host computer is not working properly	1.check the communication cable 2.correctly set the communications expansion card type 3.correctly set the communication parameters 4.check the wiring of host computer
17	Err.17	Contactor fault	1.input phase loss 2.the drive plate and the contact are not normal	1.check and eliminate the existing problems in the peripheral line 2.replace the drive, the power board or contactor
18	Err.18	Current detection fault	1.check Hall device 2.the drive panel is abnormal.	1.replace the drive panel 2.replace hall device
19	Err.19	Motor parameter auto tuning fault	1.the motor parameters was not set according to the nameplate 2.the identification process of parameter is timeout	1.correctly set motor parameter according to the nameplate 2.check the lead wire from the inverter to the motor
20	Reserve			
21	Err.21	EEPROM read and write fault	EEPROM chip is damaged	Replace the main control panel
22	Err.22	Inverter hardware fault	1.overvoltage 2.overcurrent	1.eliminate overvoltage fault 2.eliminate overcurrent fault

23	Err.23	Short-circuit to ground fault	Motor short to ground	Replace the cable or motor
26	Err.26	Cumulative running time arrival fault	Cumulative running time arrival fault	Clear history information by using initialization function parameters
27	Err.27	Custom fault 1	Input custom fault 1 signal through the multi-function terminal DI	Reset run
28	Err.28	Custom fault 2	Input custom fault 2 signal through the multi-function terminal DI	Reset run
29	Err.29	Total power-on time arrival fault	Total power-on time reaches the set value	Clear history information by using initialization function parameters
30	Err.30	Load drop fault	The inverter running current is less than F8.31	Confirm whether the load is removed or not or the settings for parameter(F8.31, F8.32) accord with the Actual operating conditions
31	Err.31	PID feedback loss when running fault	PID feedback is less than the set value of E2.11	Check PID feedback signal or set E2.11 to an appropriate value
40	Err.40	Quick current limiting fault	1.whether the load is too large or the motor stall occurs 2.the type selection of inverter is small	1.reduce the load and check the motor and its mechanical conditions 2.choose the inverter with large power level
41	Err.41	Switch motor when running fault	Change current motor through the terminal when the inverter is running	Switch motor after the inverter stops
42	Reserve			
43	Err.43	Motor over speed fault	1.the parameter was not identified 2.the setting for encoder parameters is incorrect 3.the setting for motor overspeed detection parameter(F8.13, F8.14) is unreasonable.	1.perform identification for the motor parameters 2.correctly set encoder parameters 3.reasonably set the detection parameters
45	Err.45	Motor overtemperature fault	1.the wiring of temperature sensor is loose 2.the motor temperature is too high	1.detect the wiring of temperature sensor wiring and eliminate fault. 2.decrease carrier frequency or take other cooling measures to cool motor
51	Err.51	Initial position error	the deviation between the motor parameters and the actual parameters is too large	reconfirm the correct motor parameters, focus on whether the rated current is set to too small.
-	COF	Communication failure	1.Keyboard interface control board interface; 2.Keyboard or crystal connector; 3.Control board or keyboard	1. Detection of keyboard interface, control board interface is abnorma. 2.Detect keyboard, crystal joints are abnormal.

			hardware damage; 4.Keyboard line is too long, causing the interference.	3.Replace control board or keyboard. 4. Consult factory, seek help.

6-2.EMC (Electromagnetic Compatibility)

Electromagnetic compatibility refers to the ability that the electric equipment runs in an electromagnetic interference environment and implements its function stably without interferences on the electromagnetic environment.

6-2-1EMC standard

In accordance with the requirements of the Chinese national standard GB/T12668.3, the inverter must comply with the requirements of electromagnetic interference and anti-electromagnetic interference.

Our existing products adopt the latest international standards: IEC/EN61800-3: 2004 (Adjustable speed electrical Power drive systems Part 3: EMC requirements and specific test methods), which is equivalent to the Chinese national standards GB/T12668.3. EC/EN61800-3 assesses the inverter in terms of electromagnetic interference and anti-electronic interference. Electromagnetic interference mainly tests the radiation interference, conduction interference and harmonics interference on the inverter (necessary for civil inverter).

Anti-electromagnetic interference mainly tests the conduction immunity, radiation immunity, surge immunity, EFTB(Electrical Fast Transient Burs) immunity, ESD immunity and power low frequency end immunity (the specific test items includes: 1. Immunity tests of input voltage sag, interrupt and change; 2.commutation notch immunity; 3. harmonic input immunity ; 4. input frequency change; 5. input voltage unbalance; 6. input voltage fluctuation). The tests shall be conducted strictly in accordance with the above requirements of IEC/EN61800-3, and our products are installed and used according to the guideline of the Section 7.3 and can provide good electromagnetic compatibility in general industry environment.

6-3.EMC directive

6-3-1. Harmonic effect

The higher harmonics of power supply may damage the inverter. Thus, at some places where the quality of power system is relatively poor, it is recommended to install AC input reactor.

6-3-2. Electromagnetic interference and installation precautions

There are two kinds of electromagnetic interference, one is the interference from electromagnetic noise in the surrounding environment to the inverter, and the other is the interference from the inverter to the surrounding equipment.

Installation Precautions:

1)The earth wires of the Inverter and other electric products ca shall be well grounded;

2)The power cables of the inverter power input and output and the cable of weak current signal (e.g. control line) shall not be arranged in parallel but in vertical if possible.

3) It is recommended that the output power cables of the inverter shall use shield cables or steel pipe shielded cables and that the shielding layer shall be grounded reliably, the lead cables of the equipment suffering interferences shall use twisted-pair shielded control cables, and the shielding layer shall be grounded reliably.

4)When the length of motor cable is longer than 30 meters, it needs to install output filter or reactor.

6-3-3. Remedies for the interference from the surrounding electromagnetic equipment to the inverter

Generally the electromagnetic interference on the inverter is generated by plenty of relays, contactors and electromagnetic brakes installed near the inverter. When the inverter has error action due to the interference, the following measures is recommended:

1) Install surge suppressor on the devices generating interference;

2) Install filter at the input end of the inverter, please refer to Section 6.3.6 for the specific operations.

3) The lead cables of the control signal cable of the inverter and the detection line shall use the shielded cable and the shielding layer shall be grounded reliably.

6-3-4. Remedies for the interference from the inverter to the surrounding electromagnetic equipment

These noise interference are classified into two types: one is the radiation interference of the inverter, and the other is the conduction interference of the inverter. These two types of interference cause that the surrounding electric equipment suffer from the affect of electromagnetic or electrostatic induction. Further, the surrounding equipment produces error action. For different interference, please refer to the following remedies:

1) Generally the meters, receivers and sensors for measuring and testing have more weak signals. If they are placed nearby the inverter or together with the inverter in the same control cabinet, they easily suffer from interference and thus generate error actions. It is recommended to handle with the following methods: away from the interference source as far as possible; do not arrange the signal cables with the power cables in parallel and never bind them together; both the signal cables and power cables shall use shielded cables and shall be well grounded; install ferrite magnetic ring (with suppressing frequency of 30 to 1, 000MHz) at the output side of the inverter and wind it 2 to 3 turns; install EMC output filter in more severe conditions.

2) When the interfered equipment and the inverter use the same power supply, it may cause conduction interference. If the above methods cannot remove the interference, it shall install EMC filter between the inverter and the power supply (refer to Section 6.3.6 for the selection operation);

3) The surrounding equipment shall be separately grounded, which can avoid the interference caused by the leakage current of the inverter's grounding wire when common grounding mode is adopted.

6-3-5. Remedies for leakage current

There are two forms of leakage current when using the inverter. One is leakage current to the earth, and the other is leakage current between the cables.

1) Factors of affecting leakage current to the earth and its solutions:

There are the distributed capacitance between the lead cables and the earth. The larger the distributed capacitance, the larger the leakage current; the distributed capacitance can be reduced by effectively reducing the distance

between the inverter and the motor. The higher the carrier frequency, the larger the leakage current. The leakage current can be reduced by reducing the carrier frequency. However, the carrier frequency reduced may result in

the increase of motor noise.Please note that additional installation of reactor is also an effective method to solve leakage current problem.

The leakage current may increase with the increase of circuit current. Therefore, when the motor power is higher, the corresponding leakage current will be higher too.

2) Factors of producing leakage current between the cables and its solutions:

There is the distributed capacitance between the output cables of the inverter. If the current passing lines has higher harmonic, it may cause resonance and thus result in leakage current. If the thermal relay is used, it may generate error action.

The solution is to reduce the carrier frequency or install output reactor. It is recommended that the thermal relay shall not be installed in the front of the motor when using the inverter, and that electronic over current protection function of the inverter shall be used instead.

6-3-6. Precautions on installing EMC input filter at the input end of power supply

1) Note: when using the inverter, please follow its rated values strictly. Since the filter belongs to Classification I electric appliances, the metal enclosure of the filter and the metal ground of the installing cabinet shall be well earthed in a large area, and have good conduction continuity, otherwise there may be danger of electric shock and the EMC effect may be greatly affected.

Through the EMC test, it is found that the filter ground end and the PE end of the inverter must be connected to the same public earth end, otherwise the EMC effect may be greatly affected.

2) The filter shall be installed at a place close to the input end of the power supply as much as possible.

Chapter 7 Dimension

7-1. Dimension

7-1-1. Product outside drawing, installation size

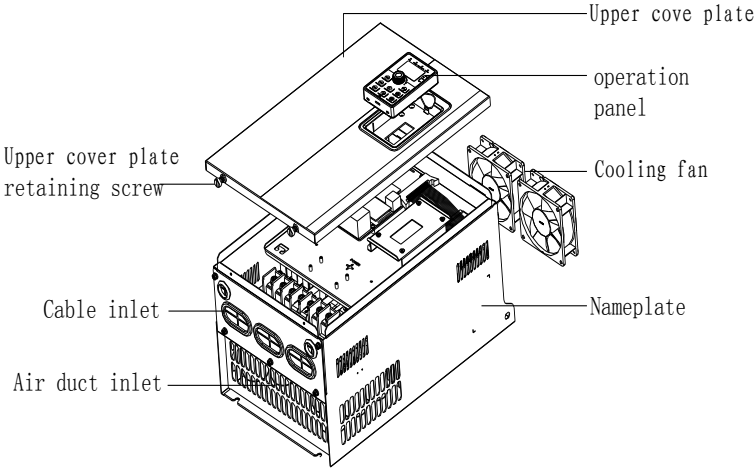

Drawing 7-1:Product outside drawing, installation dimension

7-1-2. PI500-S series

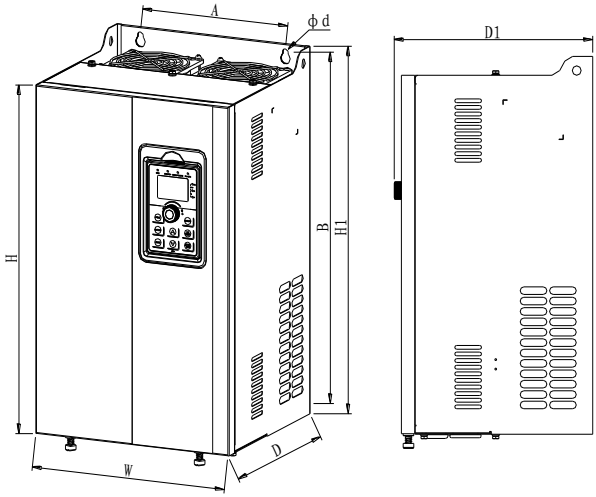

Drawing 7-2: 7.5-160kW G3 dimension

7-1-3. PI500 Series(With DC reactor base)

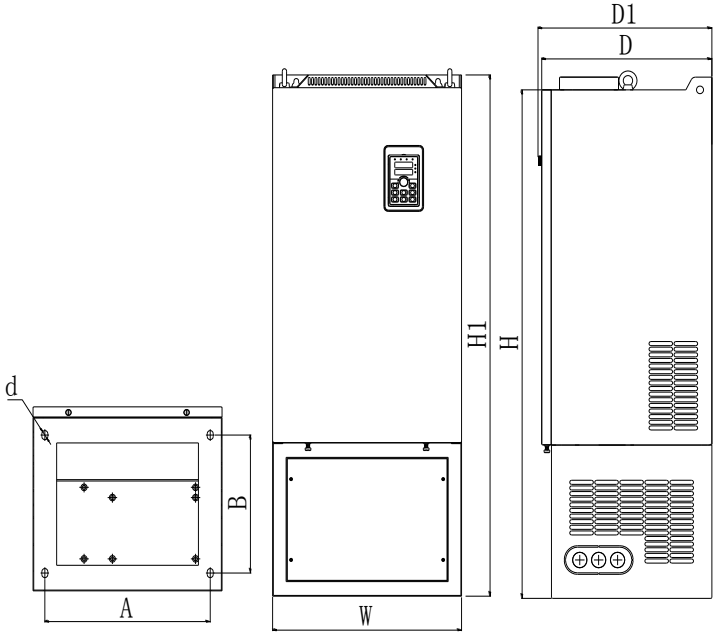

Drawing 7-3:132kW G3 (With DC reactor base) Overall dimension

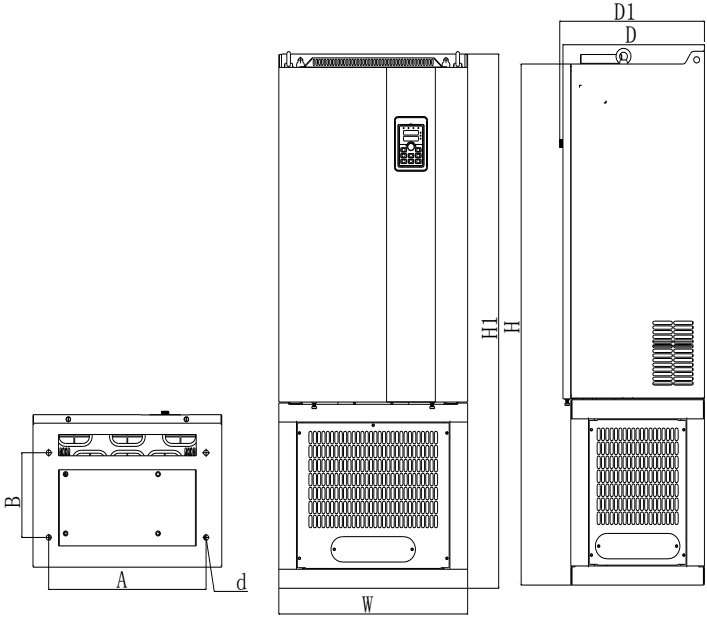

Drawing 7-4:160kW G3 (With DC reactor base) Overall dimension

Power rating	Output power (kW)	Dimension (mm)					Installation(mm)			Weight (kg)
		H	H1	W	D	D1	A	B	d	
PI500-5R5G1	5.5	280	300	190	190	198	140	285	6	7.2
PI500-5R5G2	5.5									
PI500-7R5G2	7.5									
PI500-7R5G3	7.5									
PI500-011G3	11									
PI500-015G3	15									
PI500-011G2	11	330	350	210	190	198	150	335	6	9.5
PI500-018G3	18.5									
PI500-022G3	22									
PI500-015G2	15	380	400	240	215	223	180	385	7	13
PI500-018G2	18.5									
PI500-030G3	30									
PI500-037G3	37									
PI500-022G2	22	500	520	300	275	283	220	500	10	41.2
PI500-030G2	30									
PI500-037G2	37									
PI500-045G3	45									
PI500-055G3	55									
PI500-075G3	75									
PI500-045G2	45	550	575	355	320	328	250	555	10	58
PI500-055G2	55									
PI500-093G3	93									
PI500-110G3	110									
PI500-075G2	75	695	720	400	360	368	300	700	10	72.5
PI500-132G3	132									
PI500-132G3R	132	995	1020	400	360	368	350	270	13*18	114.5
PI500-160G3	160									
PI500-160G3R	160	1230	1260	480	360	368	400	200	13	153

Note: with "R" letter means with DC reactor; Product height dimension after installation of ring screw: H1 +15 mm.

7-1-4. Keypad dimension drawing

PI500 Keypad dimension drawing:

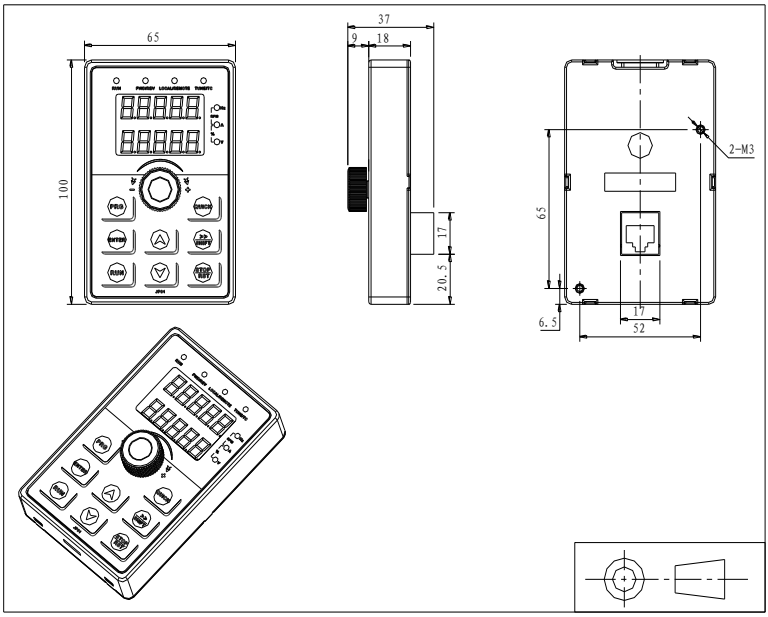

Drawing 7-5:PI500 Keypad dimension drawing (mm)

PI500 Keyboard frame dimension:

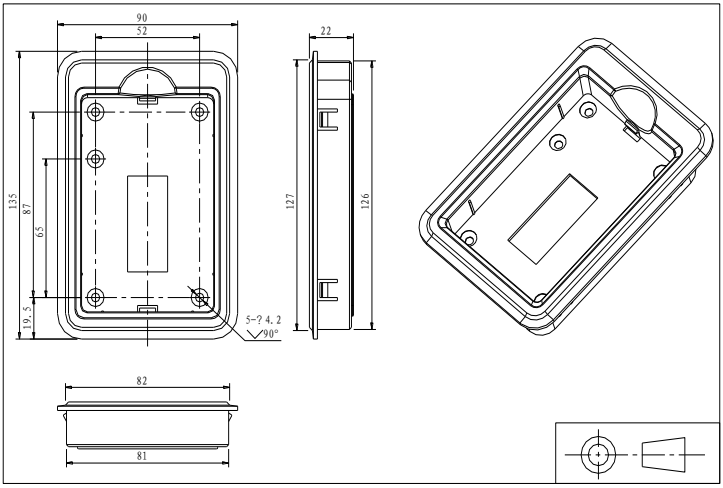

Drawing 7-6:Keyboard frame dimension (mm)

PI500 Keyboard installation open inlet dimension:

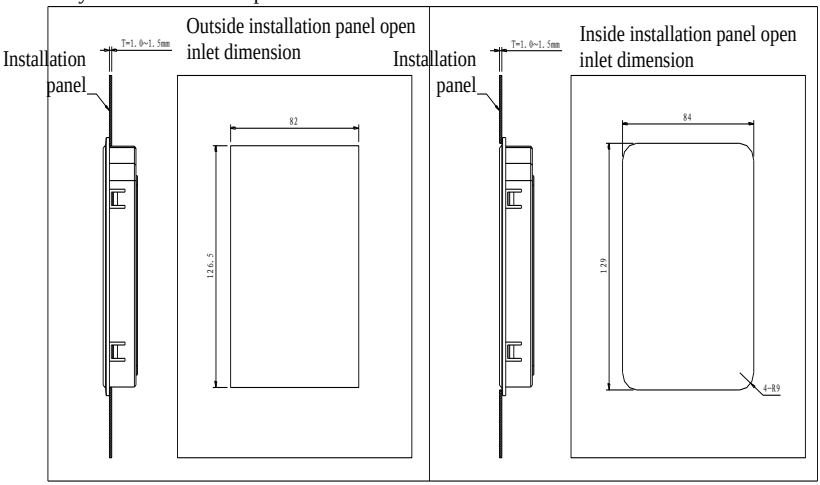

Drawing 7-7:Keyboard installation open inlet dimension (mm)

Chapter 8 Maintenance and repair

8-1. Inspection and maintenance

During normal use of the inverter, in addition to routine inspections, the regular inspections are required (e.g. the overhaul or the specified interval, and the interval shall not exceed 6 months), please refer to the following table to implement the preventive measures.

Check Date		Check Points	Check Items	Check to be done	Method	Criterion
Routine	Regular					
√		Display	LED display	Whether display is abnormal or not	Visually check	As per use status
√	√	Cooling system	Fan	Whether abnormal noise or vibration exists or not	Visually and audibly check	No abnormal
√		Body	Surrounding conditions	Temperature, humidity, dust, harmful gas.	Visually check with smelling and feeling	As per Section 2-1
√		Input/output terminals	Voltage	Whether input/output voltage is abnormal or not	Test R, S, T and U, V, W terminals	As per standard specifications
	√	Main circuit	Overall	Whether these phenomenon of loose fastenings, overheat, discharging, much dust, or blocked air duct exist or not	Visually check, tighten and clean	No abnormal
			Electrolytic capacitance	Whether appearance is abnormal or not	Visually check	No abnormal
			Wires and conducting bar	Whether they are loose or not	Visually check	No abnormal
			Terminals	If screws or bolts are loose or not	Tighten	No abnormal

"√" means routine or regular check to be needed

Do not disassemble or shake the device gratuitously during check, and never unplug the connectors, otherwise the system will not run or will enter into fault state and lead to component failure or even damage to the main switching device such as IGBT module.

The different instruments may come to different measurement results when measuring. It is recommended that the pointer voltmeter shall be used for measuring input voltage, the rectifier voltmeter for output voltage, the clamp-on ammeter for input current and output current, and the electric wattmeter for power.

8-2. Parts for regular replacement

To ensure the reliable operation of inverter, in addition to regular care and maintenance, some internal mechanical wear parts(including cooling fan, filtering capacitor of main circuit for energy storage and exchange, and printed circuit board) shall be regularly replaced. Use and replacement for such parts shall follow the provisions of below table, also depend on the specific application environment, load and current status of inverter.

Name of Parts	Standard life time
Cooling fan	1 to 3 years
Filter capacitor	4 to 5 years
Printed circuit board(PCB)	5 to 8 years

8-3. Storage

The following actions must be taken if the inverter is not put into use immediately(temporary or long-term storage) after purchasing:

※ It should be store at a well-ventilated site without damp, dust or metal dust, and the ambient temperature complies with the range stipulated by standard specification

※ Voltage withstand test can not be arbitrarily implemented, it will reduce the life of inverter. Insulation test can be made with the 500-volt megger before using, the insulation resistance shall not be less than 4MΩ.

8-4. Capacitor

8-4-1. Capacitor rebuilt

If the frequency inverter hasn't been used for a long time, before using it please rebuilt the DC bus capacitor according the instruction. The storage time is counted from delivery.

Time	Operation instruction
Less than 1 year	No need to recharge
Between 1~2 years	Before the first time to use, the frequency inverter must be recharged for one hour
Between 2~3years	Use adjustable power to charge the frequency inverter: --25% rated power 30 minutes, -- 50% rated power 30minutes, -- 75% rated power 30minutes, --Last 100% rated power 30minutes,
More than 3 years	Use adjustable power to charge the frequency inverter: --25% rated power 2hours, --50% rated power 2 hours, -- 75% rated power 2hours, -- Last 100% rated power 2hours.

Instruction of using adjustable power to charge the frequency inverter:

The adjustable power is decided by the frequency inverter input power, for the single phase/3 phase 220v frequency inverter, we uase 220v AC/2A Regulator. Both single phase and three phase frequency inverter can be charged by single phase Power Surge(L+ connect R,N connects T) Because it is the same rectifier， so al l the DC bus capacitor will be charged at the same time.

You should make sure the voltage(380v) of high voltage frequency inverter, because when the capacitor being charged it almost doesn't need any current, so small capacitor is enough(2A)

The instruction of using resisitor(incandescent lights) to charge frequency inverters:

When charge the DC bus capacitor of drive system by connecting power directly, then the time should not be less than 60 minutes. The operation should be carried on under the condition of normal temperature and without load, and moreover ,should be added resistor in the power supply cycle.

380V drive system: use 1K/100W resistor. When the power is less than 380v, 100w incandescent lights is also suitable. When using incandescent lights, the lights will extinct or become very weak.

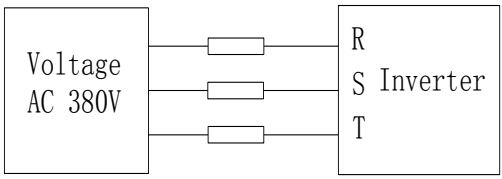

380V Drive equipment charging circuit example

8-5. Measuring and readings

※ If a general instrument is used to measure current, imbalance will exists for the current at the input terminal. generally, the deviation is not more than 10%, that is normal. If the deviation exceeds 30%, please inform the original manufacturer to replace rectifier bridge, or check if the deviation of three-phase input voltage is above 5V or not.

※ If a general multi-meter is used to measure three-phase output voltage, the reading is not accurate due to the interference of carrier frequency and it is only for reference.

Chapter 9 Warranty

The product quality shall comply with the following provisions:

1. Warranty terms

1-1. The product from the user the date of purchase, the warranty period of 12 months (limited to domestic market).

1-2. Export products and non-standard products warranty period is 12 months or according to the agreement of warranty execution.

1-3. The product from the user the purchase date, guarantee to return, replacement, repair service, within one month after the date of shipment.

1-4. The product from the user the date of purchase, replacement, repair within three months after the date of shipment.

1-5. The product from the user the purchase date, enjoy lifelong compensable service.

2. Exceptions clause

If belongs to the quality problems caused by following reasons products, not within the warranty.

2-1. The user is not in accordance with the "products manual" is used method of operation caused the failure.

2-2. Users without permission to repair or alteration caused by product failure.

2-3. Users beyond the standard specifications require the use of the inverter caused by product failure.

2-4. Users to buy and then fell loss or damage caused by improper handling.

2-5. Because the user use environment device caused by aging lead to product failure.

2-6. Due to the fault cause of earthquake, fire, lightning, wind or water disaster, abnormal voltage irresistible natural disasters.

2-7. Damaged during shipping (Note: the transport mode specified by the customer, the company to assist to handle cargo transfer procedures).

3. The following conditions, manufacturers have the right not to be warranty

3-1. No product nameplate or product nameplate blurred beyond recognition.

3-2. Not according to the purchase contract agreement to pay the money.

3-3. For installation, wiring, operation, maintenance and other users can not describe the objective reality to the company's technical service center.

4. In return, replacement, repair service, shall be returned the company, confirmed the attribution of responsibility, can be returned or repair.

Appendix I Recommended solar array configuration

Inverter power (kW)	Max. DC input current (A)	Open-circuit voltage degree of solar module									
		20±3V		30±3V		36±3V		42±3V			
		Module power ±5Wp	Modules per string×strings	Module power ±5Wp	Modules per string×strings	Module power ±5Wp	Modules per string×strings	Module power ±5Wp	Modules per string×strings	Module power ±5Wp	Modules per string×strings
0.75	4.2	30	29*1	-	-	-	-	-	-	-	-
1.5	6.1	60	30*1	-	-	-	-	-	-	-	-
2.2	7.1	90	30*1	-	-	145	18*1	175	15*1	-	-
4	16.5	85	28*2	220	22*1	140	17*2	160	15*2	-	-
5.5	23.9	-	-			195	17*2	220	15*2	-	-
7.5	30.6	-	-	215	21*2	175	17*3	200	15*3	300	15*2
11	39.2	-	-	200	22*3	195	17*4	220	15*4	-	-
15	49	-	-	205	22*4	200	18*5	240	15*5	300	15*4

Above example by 380V voltage rating, recommended solar array configuration.
220V voltage level or 380V voltage level, recommended DC input power is about 1.2 times of inverter rated power.

Appendix II RS485 Communication protocol

I I -1 Communication protocol

I I -1-1 Communication content

This serial communication protocol defines the transmission information and use format in the series communication Including: master polling(or broadcast) format; master encoding method, and contents including: function code of action, transferring data and error checking. The response of slave also adopts the same structure, and contents including: action confirmation, returning the data and error checking etc. If slave takes place the error while it is receiving information or cannot finish the action demanded by master, it will send one fault signal to master as a response.

Application Method

The inverter will be connected into a “Single-master Multi-slave” PC/PLC control network with RS485 bus.

Bus structure

(1)Interface mode

RS485 hardware interface

(2) Transmission mode

Asynchronous series and half-duplex transmission mode. For master and slave, only one of them can send the data and the other only receives the data at the same time. In the series asynchronous communication, the data is sent out frame by frame in the form of message

(3) Topological structure

Single-master and multi-slave system. The setting range of slave address is 0 to 247, and 0 refers to broadcast communication address. The address of slave for network must be exclusive.

I I-1-2 Communication connection

Standalone method

Diagram I-3 is the single inverter and PC set up MODBUS field wiring diagram. Because computers are generally not with RS485 interface, the computer must be built-in RS232 interface or USB interface through the converter to convert to RS485. Connect the T + of converter with 485 + terminal of the inverter, Connect the T- of converter with 485- terminal of inverter. We recommended to use a shielded twisted pair. When adopting the RS232-485 converter,RS232 interface connected with RS232-RS485 RS232 interface, the cable should be as short as possible,15meters at the longest, we recommend to plug the RS232-RS485 with computer in pair directly. Similarly, when using the USB-RS485 converter, cable should be as short as possible.

When the line is connected, connect the right port of the host computer on the computer to (RS232-RS485 converter port, such as COM1), and set the basic parameters and the baud rate and data bit parity and so on consistent with the inverter.

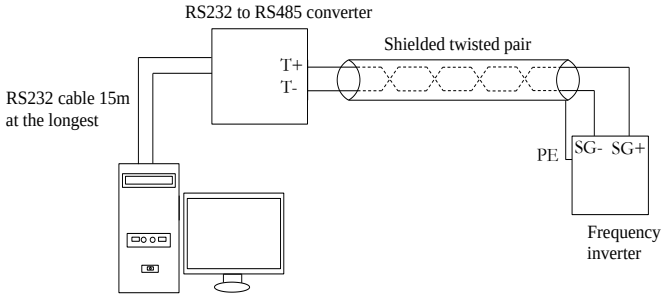

I I -1-3 Protocol description

PI500-S series inverter communication protocol is a asynchronous serial master-slave

communication protocol, in the network, only one equipment(master) can build a protocol (known as “Inquiry/Command”). Other equipment(slave) only can response the "Inquiry/Command"of master by providing data or perform the corresponding action according to the "Inquiry/Command"of master. Here, the master refers to a Personnel Computer(PC), an industrial control device or a programmable logic controller (PLC), etc. and the slave refers to PI500 inverter. Master can communicate with individUal slave, also send broadcasting information to all the lower slaves. For the single "Inquiry/Command"of master, slave will return a signal(that is a response) to master; for the broadcasting information sent by master, slave does not need to feedback a response to master.

Communication data structure PI500 -Sseries inverter's Modbus protocol communication data format is as follows: in RTU mode, messages are sent at a silent interval of at least 3.5 characters. There are diverse character intervals under network baud rate,

which is easiest implemented. The first field transmitted is the device address.

The allowable characters for transmitting are hexadecimal 0 ... 9, A ... F. The networked devices continuously monitor network bus, including during the silent intervals. When the first field (the address field) is received, each device decodes it to find out if it is sent to their own. Following the last transmitted character, a silent interval of at least 3.5 characters marks the end of the message. A new message can begin after this silent interval.

The entire message frame must be transmitted as a continuous stream. If a silent interval of more than 1.5 characters occurs before completion of the frame, the receiving device will flushes the incomplete message and assumes that the next byte will be the address field of a new message. Similarly, if a new message begins earlier than the interval of 3.5 characters following a previous message, the receiving device will consider it as a continuation of the previous message. This will result in an error, because the value in the final CRC field is not right.

RTU frame format:

Frame header START	Time interval of 3.5characters
Slave address ADR	Communication address: 1 to 247
Command code CMD	03: read slave parameters；06: write slave parameters
Data content DATA(N-1)	Data content: address of function code parameter, numbers of function code parameter, value of function code parameter, etc.
Data content DATA(N-2)	
……	
Data content DATA0	
CRC CHK high-order	Detection Value: CRC value.
CRC CHK low-order	
END	Time interval of 3.5characters

CMD (Command) and DATA (data word description)

Command code: 03H, reads N words (max.12 words), for example: for the inverter with slave address 01, its start address F0.02 continuously reads two values.

Master command information

ADR	01H
CMD	03H
Start address high-order	F0H
Start address low-order	02H
Number of registers high-order	00H
Number of registers low-order	02H
CRC CHK low-order	CRC CHK values are to be calculated
CRC CHK high-order	

Slave responding information

When F9.05 is set to 0:

ADR	01H

CMD	03H
Byte number high-order	00H
Byte number low-order	04H
Data F002H high-order	00H
Data F002H low-order	01H
Data F003H high-order	00H
Data F003H low-order	01H
CRC CHK low-order	CRC CHK values are to be calculated
CRC CHK high-order	

When F9.05is set to 1:

ADR	01H
CMD	03H
Byte number	04H
Data F002H high-order	00H
Data F002H low-order	01H
Data F003H high-order	00H
Data F003H low-order	01H
CRC CHK low-order	CRC CHK values are to be calculated
CRC CHK high-order	

Command Code: 06H, write a word. For example: Write 5000(1388H)into the address F013H of the inverter with slave address 02H.

Master command information

ADR	02H
CMD	06H
Data address high-order	F0H
Data address low-order	13H
Data content high-order	13H
Data content low-order	88H
CRC CHK low-order	CRC CHK values are to be calculated
CRC CHK high-order	

Slave responding information

ADR	02H
CMD	06H
Data address high-order	F0H
Data address low-order	13H
Data content high-order	13H
Data content low-order	88H
CRC CHK low-order	CRC CHK values are to be calculated
CRC CHK high-order	

I I -2 Check mode

Check mode - CRC mode: CRC (Cyclical Redundancy Check) adopts RTU frame format, the message includes an error-checking field that is based on CRC method. The CRC field checks the whole content of message. The CRC field has two bytes containing a 16-bit binary value. The CRC value calculated by the transmitting device will be added into to the message. The receiving device recalculates the value of the received CRC, and compares the calculated value to the Actual value of the received CRC field, if the two values are not equal, then there is an error in the transmission.

The CRC firstly stores 0xFFFF and then calls for a process to deal with the successive eight-bit bytes in message and the value of the current register. Only the 8-bit data in each character is valid to the CRC, the start bit and stop bit, and parity bit are invalid.

During generation of the CRC, each eight-bit character is exclusive OR(XOR) with the register contents separately, the result moves to the direction of least significant bit(LSB), and the most significant bit(MSB) is filled with 0. LSB will be picked up for detection, if LSB is 1, the register will be XOR with the preset value separately, if LSB is 0, then no XOR takes place. The whole process is repeated eight times. After the last bit (eighth) is completed, the next eight-bit byte will be XOR with the register's current value separately again. The final value of the register is the CRC value that all the bytes of the message have been applied.

When the CRC is appended to the message, the low byte is appended firstly, followed by the high byte. CRC simple functions is as follows:

```
unsigned int crc_chk_value(unsigned char *data_value,unsigned char length)
{
    unsigned int crc_value=0xFFFF;
    int i;
    while(length--)
    {
        crc_value^=*data_value++;
        for(i=0;i<8;i++)
        {
            if(crc_value&0x0001)
            {
                crc_value=(crc_value>>1)^0xa001;
            }
            else
            {
                crc_value=crc_value>>1;
            }
        }
    }
    return(crc_value);
}
```

II-3 Definition of communication parameter address

The section is about communication contents, it’s used to control the operation, status and related parameter settings of the inverter. Read and write function-code parameters (Some functional code is not changed, only for the manufacturer use or monitoring): the rules of labeling function code parameters address:

The group number and label number of function code is used to indicate the parameter address:

High byte: F0 to FB (F group), A0 to AF (E group), B0 to BF(B group),C0 to C7(Y group),70 to 7F (d group) low byte: 00 to FF

For example: address F3.12 indicates F30C; Note: L0 group parameters: neither read nor change; d group parameters: only read, not change.

Some parameters can not be changed during operation, but some parameters can not be

changed regardless of the inverter is in what state.When changing the function code parameters, please pay attention to the scope, units, and relative instructions on the parameter.

Besides, due to EEPROM is frequently stored, it will redUce the life of EEPROM, therefore under the communication mode some function code do not need to be stored and you just change the RAM value.

If F group parameters need to achieve the function, as long as change high order F of the function code address to 0. If E group parameters need to achieve the function, as long as change high order F of the function code address to 4. The corresponding function code addresses are indicated below: high byte: 00 to 0F(F group), 40 to 4F (E group), 50 to 5F(B group),60 to 67(Y group)low byte:00 to FF

For example:

Function code F3.12 can not be stored into EEPROM, address indicates as 030C; function code E3.05 can not be stored into EEPROM, address indicates as 4305; the address indicates that only writing RAM can be done and reading can not be done, when reading, it is invalid address. For all parameters, you can also use the command code 07H to achieve the function.

Stop/Run parameters section:

Parameter address	**Parameter description**
1000	*Communication set value(-10000 to10000)(Decimal)
1001	Running frequency
1002	Bus voltage
1003	Output voltage
1004	Output current
1005	Output power
1006	Output torque
1007	Operating speed
1008	DI input flag
1009	DO output flag
100A	AI1 voltage
100B	AI2 voltage
100C	Reserve
100D	Reserve
100E	Reserve
100F	Load speed
1010	PID setting
1011	PID feedback
1012	PLC step
1013	High-speed pulse input frequency, unit: 0.01kHz
1014	Reserve
1015	Remaining run time
1016	AI1 voltage before correction
1017	AI2 voltage before correction
1018	Reserve
1019	Linear speed
101A	Current power-on time
101B	Current run time
101C	High-speed pulse input frequency, unit: 1Hz
101D	Communication set value

101E	Reserve
101F	Master frequency display
1020	Auxiliary frequency display

Note:

There is two ways to modify the settings frequencies through communication mode:

The first: Set F0.03 (main frequency source setting) as 0/1 (keyboard set frequency), and then modify the settings frequency by modifying F0.01 (keyboard set frequency). Communication mapping address of F0.01 is 0xF001 (Only need to change the RAM communication mapping address to 0x0001).

The second :Set F0.03 (main frequency source setting) as 9 (Remote communication set), and then modify the settings frequency by modifying (Communication settings). , mailing address of this parameter is 0x1000.the communication set value is the percentage of the relative value, 10000 corresponds to 100.00%, -10000 corresponds to -100.00%. For frequency dimension data, it is the percentage of the maximum frequency (F0.19); for torque dimension data, the percentage is F5.08 (torque upper limit digital setting).

Control command is input to the inverter: (write only)

Command word address	Command function
2000	0001: Forward run
	0002: Reverse run
	0003: Forward Jog
	0004: Reverse Jog
	0005: Free stop
	0006: Deceleration and stop
	0007: Fault reset

Inverter read status: (read-only)

Status word address	Status word function
3000	0001: Forward run
	0002: Reverse run
	0003: Stop

Parameter lock password verification: (If the return code is 8888H, it indicates that password verification is passed)

Password address	Enter password
C000	*****

Digital output terminal control: (write only)

Command address	Command content
2001	BIT0: SPA output control BIT1: RELAY2 output control BIT2 RELAY1 output control BIT3: Manufacturer reserves the undefined BIT4: SPB switching quantity output control

Analog output DA1 control: (write only)

Command address	Command content
2002	0 to 7FFF indicates 0％ to 100％

Analog output DA2 control: (write only)

Command address	Command content
2003	0 to 7FFF indicates 0％ to 100％

SPB high-speed pulse output control: (write only)

Command address	Command content
2004	0 to 7FFF indicates 0％ to 100％

Inverter fault description:

Inverter fault address:	Inverter fault information:
8000	0000: No fault 0001: Inverter unit protection 0002: Acceleration overcurrent 0003: Deceleration overcurrent 0004: Constant speed overcurrent 0005: Acceleration overvoltage 0006: Deceleration overvoltage 0007: Constant speed overvoltage 0008: Control power failure 0009: Undervoltage fault 000A: Inverter overload 000B: Motor Overload 000C: Input phase loss 000D: Output phase loss 000E: Module overheating 000F: External fault 0010: Communication abnormal 0011: Contactor abnormal 0012: Current detection fault 0013: Motor parameter auto tunning fault 0015: Parameter read and write abnormal 0016: Inverter hardware fault 0017: Motor short to ground fault 001A:Running time arrival 001B: Custom fault 1 001C: Custom fault 2 001D: Power-on time arrival 001E: Load drop 001F: PID feedback loss when running 0028: Fast current limiting timeout 0029: Switch motor when running fault 002B: Motor overspeed 002D: Motor overtemperature 005C: Initial position error

Data on communication failure information description (fault code):

Communication fault address	Fault function description
8001	0000: No fault 0001: Password error 0002: Command code error 0003: CRC check error

	0004: Invalid address 0005: Invalid parameters 0006: Invalid parameter changes 0007: System locked 0008: EEPROM in operation

Product information feedback

Dear user:

Thank you for your interest in and purchasing Powtran products! In order to better serve you, we want to be able to timely get your personal information and the related information of the purchased Powtran products so as to understand your further demands for our Powtran products, we would appreciate your valuable feedback. For your convenience, please visit our website http://www.powtran.com and then click "Technologies and Services"and "Download" columns to submit your feedback information.

1) Download the update product manUals you need
2) View the technical information on products, such as operation instructions, specifications and features, FAQ, etc.
3) Share application cases.
4) Technical advisory and online feedback
5) Feedback the product and demand information via e-mail
6) Inquire the latest products and access to various types of warranty and extend additional services